YAMAHA

PARTS CATALOGUE

LB80 II H (5R4)

115R4-200E1

FOREWORD

This Parts Catalogue is related to the parts in use for the Yamaha LB80ⅡH (5R4).
When you are ordering replacement parts for the LB80ⅡH (5R4), refer to this Parts Catalogue and quote both part numbers and part names correctly.

1. Modifications or additions which have been made after issue of the Parts Catalogue will be announced in the Yamaha Parts News.
   It is advisable that according to the Yamaha Parts News you make necessary corrections to the Parts Catalogue on hand to keep it up-to-date.

2. Abbreviations
   The following abbreviations are used in this Parts Catalogue.

U.R.	Use size (thickness) and/or number as required.
U.N.	Use as many as you need.
A.P.	Alternate Parts
L.M.	Local Made
F#	Frame No. (Applicable machine No.)

3. The parts marked with (*) in the parts number column of this Catalogue are not supplied with by Yamaha, those have to be found locally.

4. Parts, which are to be supplied in the form of assemblies, are listed with an indention of one letter's space, and a dot (.) is put against the name of each part.

   EXAMPLE

   CARBURETOR ASS'Y
   . JET, pilot
   . NOZZLE, main

5. Indication of No. of constituent parts for assembly
   The numeral appearing to the right of each constituent part under the description indicates the quantity of such parts for each individual assembly unit.

   EXAMPLE

Part No.	Description	Q'ty	Remarks
2F5-83310-60	FRONT FLASHER LIGHT ASS'Y	2	
115-83311-60	. BULB (6V-18W)	1	
1M1-83309-60	. REFLECTOR	1	

6. Initial Serial No. and Color Code

Ⓐ	Frame Serial No.	5R4-000101 and following
Ⓑ	Engine Serial No.	5R4-000101 and following

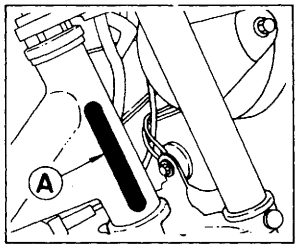

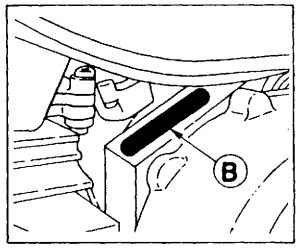

Color Code	Color Name	Abbreviate
E1	Chappy Red	CPR
L3	Competition Light Green	CLG
1A	New White	NW
26	Competition Yellow	CPY
29	Candy Blue	CB

7. Applicable colors of graphics are represented in the "Remarks" column by the letter(s) appropriately picked out of the full word(s) showing such colors.

   EXAMPLE

Part No.	Description	Q'ty	Remarks
2N4-24110-00-X5	FUEL TANK COMP.	1	MAXIM RED
3J1-24240-10	. GRAPHIC, fuel tank set	1	for MXR

CONTENTS

ENGINE

Cylinder Head · Cylinder B2
Crankshaft · Piston B3
C.D.I. Magneto B4
Oil Pump B5
Intake B6
Carburetor ..... B7 ~ B8
Exhaust B9
Crankcase B10
Crankcase Cover B11
Kick Starter B12
Clutch ..... B13 ~ B14
Transmission B15
Shift Cam · Fork C2
Shift Shaft · Pedal C3

CHASSIS

Frame · Tool ..... C4 ~ C5
Front Fender · Rear Fender C6
Oil Tank C7
Rear Arm · Suspension C8
Steering C9
Front Fork ..... C10 ~ C11
Fuel Tank C12
Seat C13
Carrier C14
Front Wheel ..... C15 ~ D2
Rear Wheel ..... D3 ~ D4
Handlebar · Cable D5
Stand · Footrest D6
Flasher Light D7
Meter D8
Headlight D9
Taillight D10
Electrical 1 ..... D11 ~ D12
Handle Switch · Lever D13
Leg Shield D14

REPAIR KIT

Repair Kit D15

INDEX

Numerical Index ..... M1 ~ M3
Parts Name Index ..... M12 ~ M16

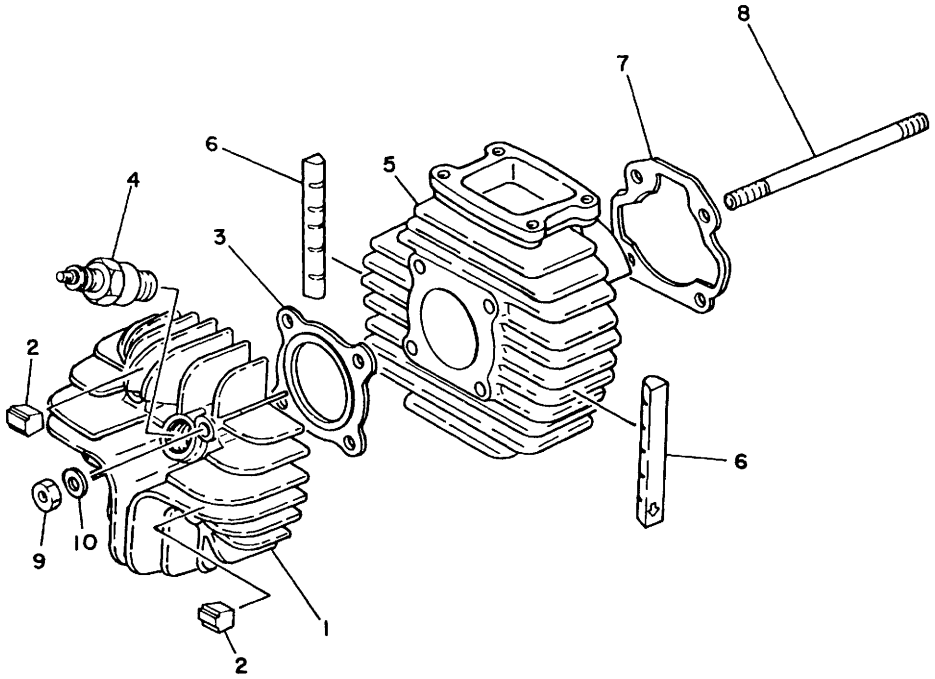

FIG. 1 CYLINDER HEAD. CYLINDER

REF. NO.	PART NO.	DESCRIPTION	Q'TY	REMARKS
1	527-11111-00-94	HEAD, cylinder 1	1	al chrome
2	1T9-11161-00	ABSORBER 1	4	
3	1F5-11181-00	GASKET, cylinder head 1	1	
4	94701-00040	PLUG, sPark (NGK B7HS)	1	
5	4F7-11311-00	CYLINDER 1	1	
6	1F5-11162-00	ABSORBER 2	2	
7	440-11351-00	GASKET, cylinder	1	
8	90116-06100	BOLT, stud	4	
9	95301-06600	NUT	4	
10	92901-06200	WASHER, Plain	4	

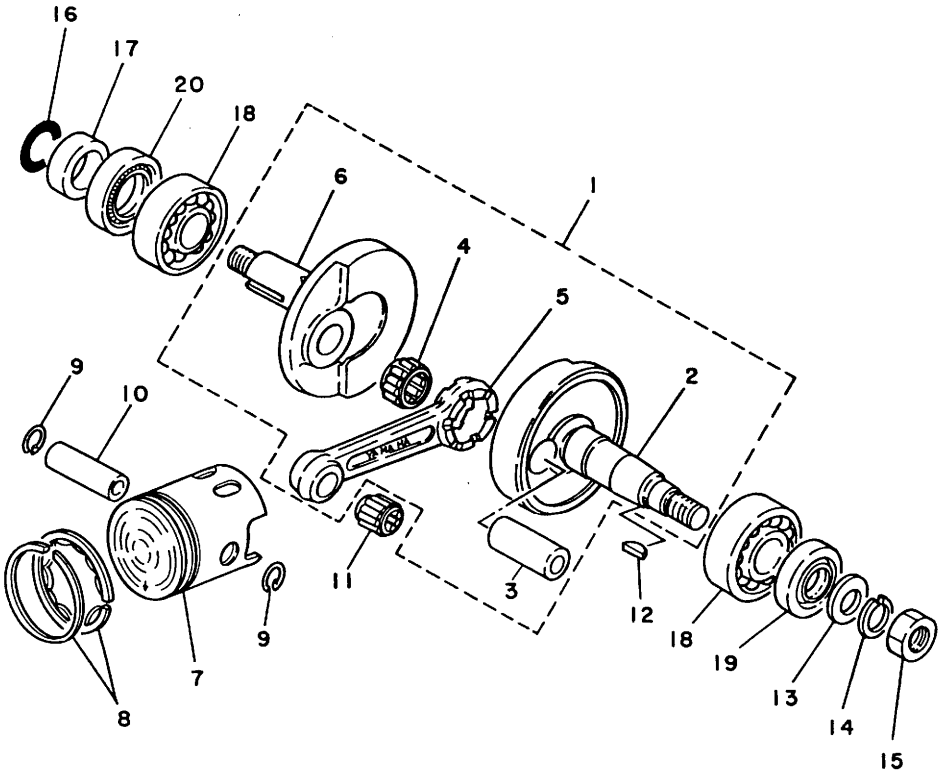

FIG. 2 CRANKSHAFT.PISTON

REF. NO.	PART NO.	DESCRIPTION	Q'TY	REMARKS
1	527-11400-02	CRANKSHAFT ASSY	1	
2	527-11412-03	.CRANK 1	1	
3	257-11681-00	.PIN, crank 1	1	
4	93310-41809	.BEARING, cylindrical	1	
5	538-11651-01	.ROD, connecting	1	
6	527-11422-01	.CRANK 2	1	
7	367-11631-11-96	PISTON (STD)	1	UR
	367-11631-11-98	PISTON (STD)	1	UR
	367-11635-11	PISTON (1ST O/S 0.25MM)	1	AP
	367-11636-11	PISTON (2ND O/S 0.50MM)	1	AP
8	367-11610-00	PISTON RING SET (STD)	1	
	367-11610-10	PISTON RING SET (1ST O/S)	1	AP
	367-11610-20	PISTON RING SET (2ND O/S)	1	AP
9	93450-13022	CIRCLIP	2	
10	527-11633-00	PIN, Piston	1	
11	93310-11268	BEARING, cylindrical	1	
12	90280-03017	KEY, woodruff	1	
13	92901-12600	WASHER, Plate	1	
14	92901-12100	WASHER, sPring	1	
15	90170-12215	NUT	1	
16	93210-18023	O-RING	1	
17	90387-20163	COLLAR	1	
18	93306-20418	BEARING (B6204CS)	2	
19	93102-20009	OIL SEAL	1	
20	93103-28011	OIL SEAL	1	

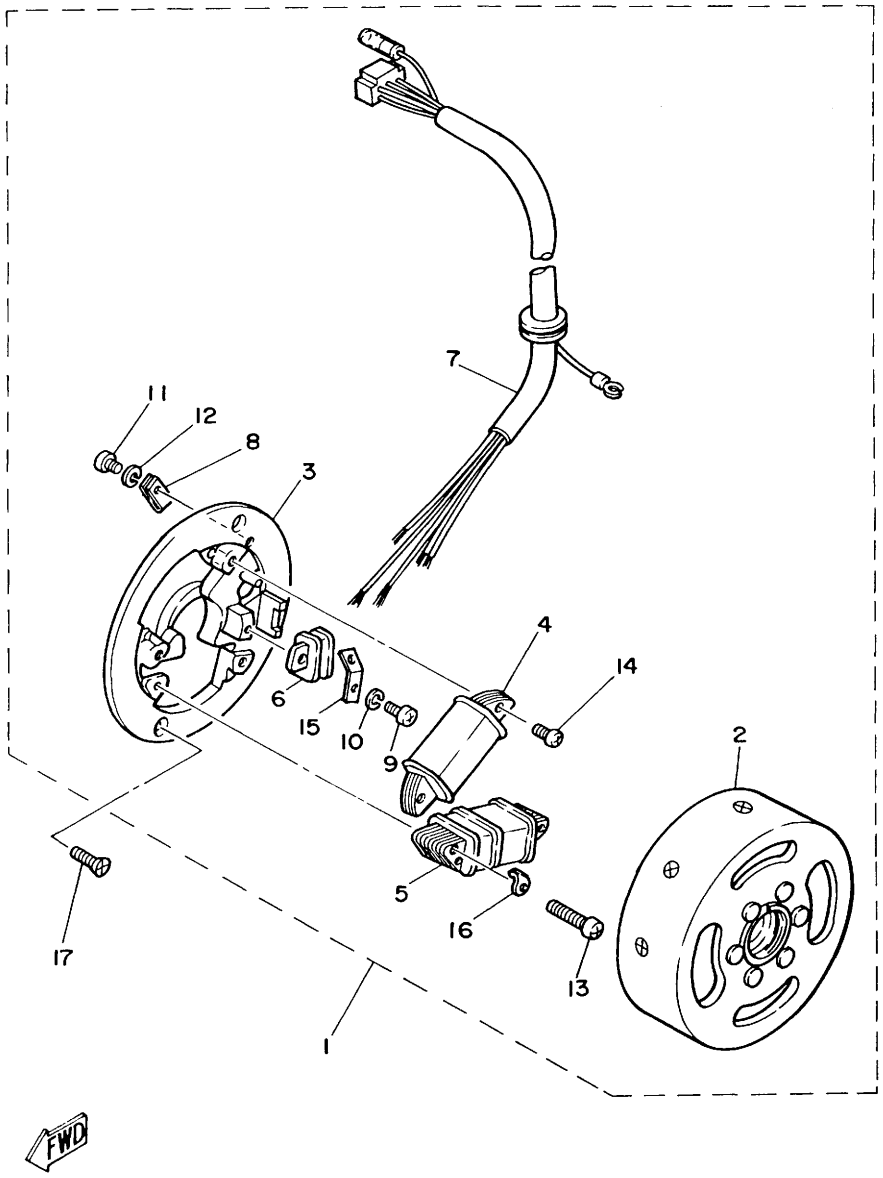

FIG. 3 C.D.I MAGNETO

REF. NO.	PART NO.	DESCRIPTION	Q'TY	REMARKS
1	3E1-85500-M1	C.D.I. MAGNETO ASSY	1	
2	4F8-85550-M0	.ROTOR ASSY	1	
3	3E1-85561-M1	.BASE, magneto	1	
4	3T5-85520-M1	.COIL, charge	1	
5	4A5-81313-M5	.COIL, lighting 1	1	
6	4U5-85580-M0	.COIL, Pulser	1	
7	3E1-8131X-M2	.CORD ASSY	1	
8	90461-05036	.CLAMP	1	
9	98503-04010	.SCREW, Pan head	1	
10	92901-04100	.WASHER, sPring	1	
11	98501-04006	.SCREW, Pan head	1	
12	92901-04100	.WASHER, sPring	1	
13	98511-04025	.SCREW, Pan head	2	
14	98501-04012	.SCREW, Pan head	2	
15	2T4-85568-M1	.TERMINAL, earth 1	1	
16	2T4-85569-M1	.TERMINAL, earth 2	1	
17	98701-05016	SCREW, flat head	2	

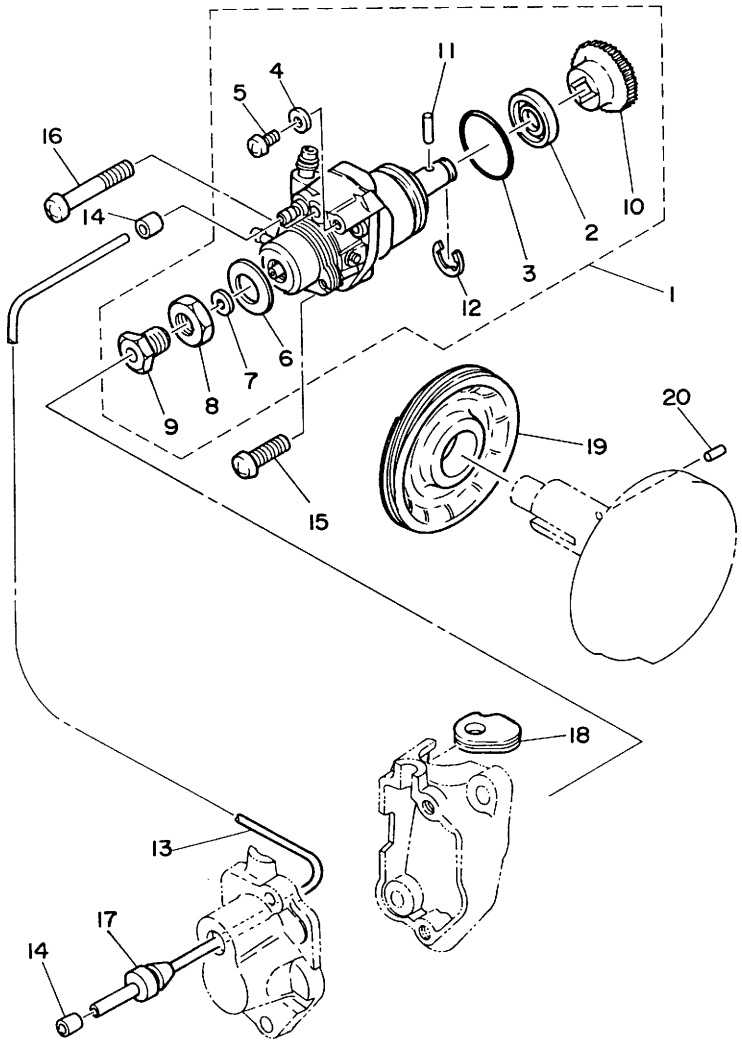

FIG. 4 OIL PUMP

REF. NO.	PART NO.	DESCRIPTION	Q'TY	REMARKS
1	2T8-13101-00	OIL PUMP ASSY	1	
2	93101-10001	•OIL SEAL	1	
3	93210-26240	•O-RING	1	
4	90430-04004	•GASKET	1	
5	90149-04135	•SCREW	1	
6	296-13147-00	•SHIM	1	
7	384-13138-00	•PLATE, adjusting	1	
8	90170-10105	•NUT	1	
9	90401-10029	•BOLT, union	1	
10	2T5-13124-00	•GEAR, worm wheel (71T)	1	
11	93603-14026	•PIN, dowel	1	
12	93430-07012	•CIRCLIP	1	
13	90445-05206	HOSE	1	
14	90468-02033	CLIP	2	
15	98501-05020	SCREW, Pan head	1	
16	98501-05035	SCREW, Pan head	1	
17	90480-11057	GROMMET	1	
18	384-13174-00	HOLDER, oil PiPe	1	
19	2T6-13178-00	GEAR, PumP drive	1	
20	93603-08072	PIN, dowel	1	

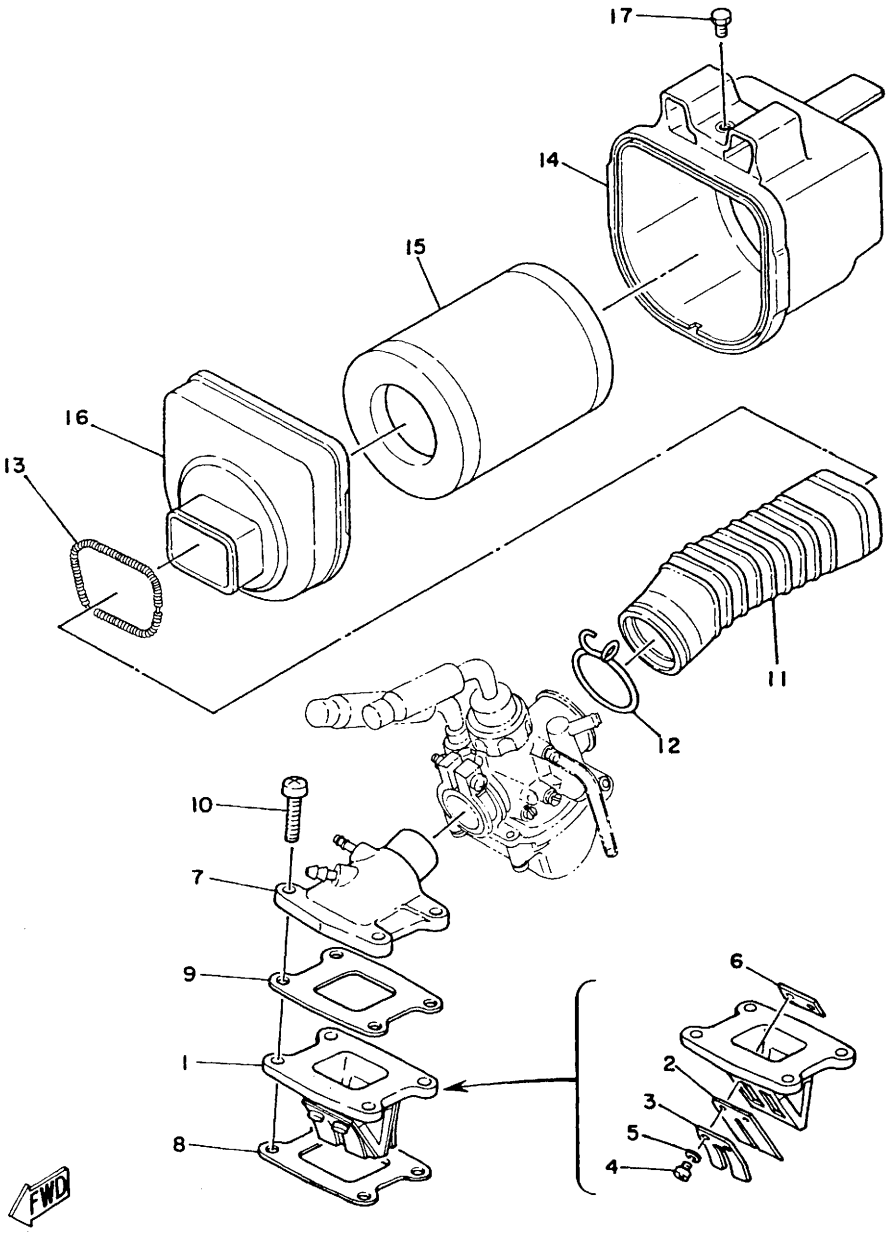

FIG. 5 INTAKE

REF. NO.	PART NO.	DESCRIPTION	Q'TY	REMARKS
1	2T5-13610-00	REED VALVE ASSY	1	
2	2T5-13613-00	•REED, valve	2	
3	314-13616-01	•STOPPER, reed valve	2	
4	98501-03008	•SCREW, Pan head	4	
5	92901-03100	•WASHER, sPring	4	
6	2T5-13624-00	•PLATE, reed valve	2	
7	1L4-13565-00	JOINT, carburetor	1	
8	1F5-13621-01	GASKET, valve seat	1	
9	1F5-13622-01	GASKET, valve seat	1	
10	92501-06025	SCREW, Pan head	4	
11	1V8-14453-00	JOINT, air cleaner 1	1	
12	90467-20023	CLIP	1	
13	90506-06075	SPRING, tension	1	
14	1V8-14411-00	CASE, air cleaner 1	1	
15	1V8-14451-00	ELEMENT, air cleaner	1	
16	1V8-14412-00	CAP, cleaner case 1	1	
17	97301-06010	BOLT	1	

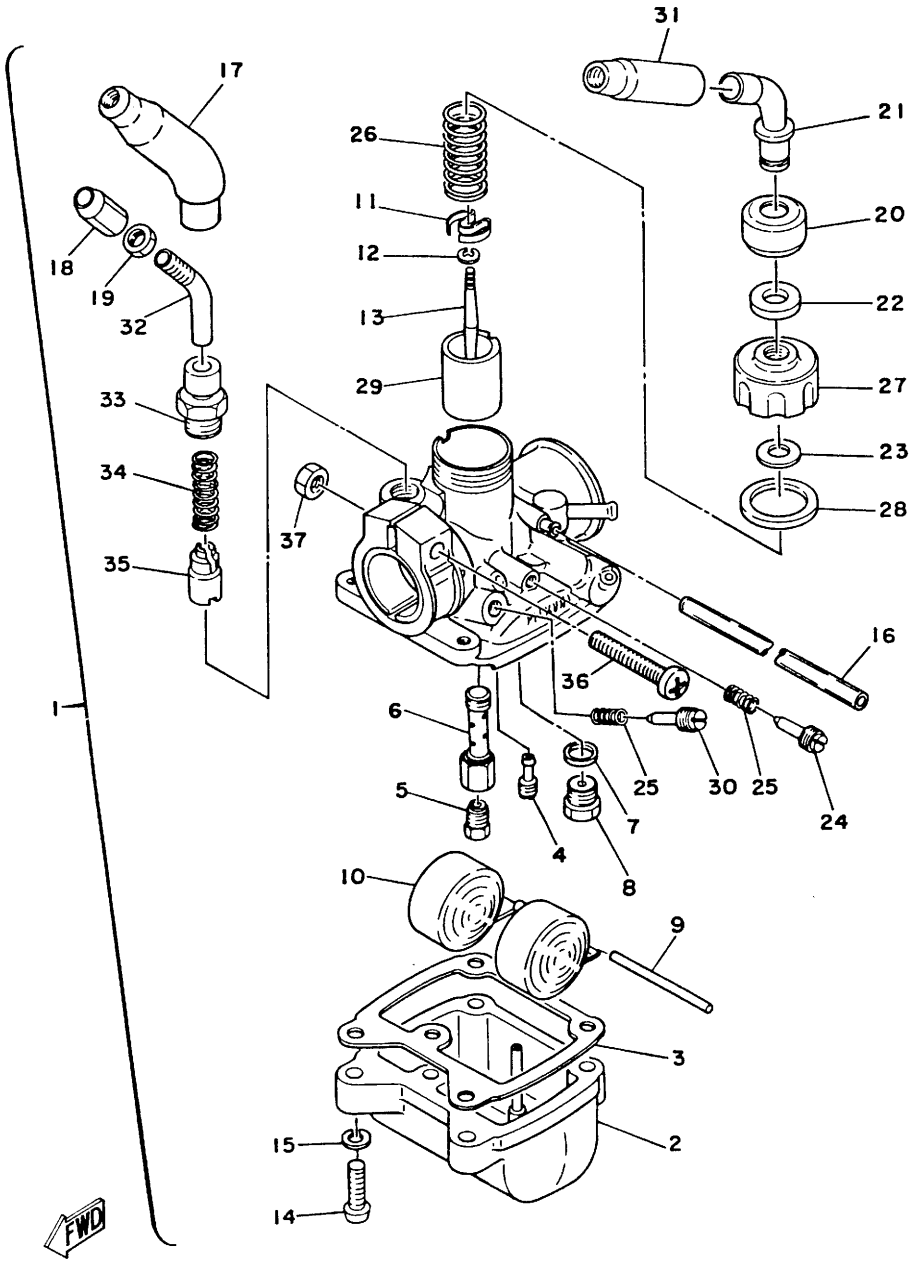

FIG. 6 CARBURETOR

REF. NO.	PART NO.	DESCRIPTION	Q'TY	REMARKS
1	4F7-14101-00	CARBURETOR ASSY 1	1	
2	2T5-14181-05	•BODY, float chamber 1	1	
3	127-14184-00	•GASKET, float chamber	1	
4	193-14142-17	•JET, Pilot (#17.5)	1	
5	127-14143-18	•JET, main (#090)	1	UR
	127-14143-19	•JET, main (#095)	1	UR
	127-14143-20	•JET, main (#100)	1	UR
6	127-14141-18	•NOZZLE, main	1	
7	127-14195-00	•WASHER, needle valve	1	
8	517-14190-12	•NEEDLE VALVE ASSY	1	
9	127-14186-00	•PIN, float	1	
10	2E9-14185-00	•FLOAT	1	
11	296-14136-00	•SEAT, spring	1	
12	127-14137-00	•CLIP	1	
13	353-14116-02	•NEEDLE	1	
14	98501-04018	•SCREW, Pan head	4	
15	92902-04100	•WASHER, spring	4	
16	1M2-14196-00	•PIPE	1	
17	1R0-14169-00	•CAP	1	
18	432-14124-00	•SCREW, cable adjusting	1	
19	127-14161-00	•NUT, cable adjusting	1	
20	1M1-14169-00	•CAP	1	
21	2T8-14155-00	•GUIDE, cable	1	
22	509-14198-00	•GASKET	1	
23	341-14952-00	•WASHER	1	
24	102-14122-00	•SCREW, throttle	1	
25	127-14134-00	•SPRING, air adjusting	2	
26	127-14131-00	•SPRING, throttle valve	1	

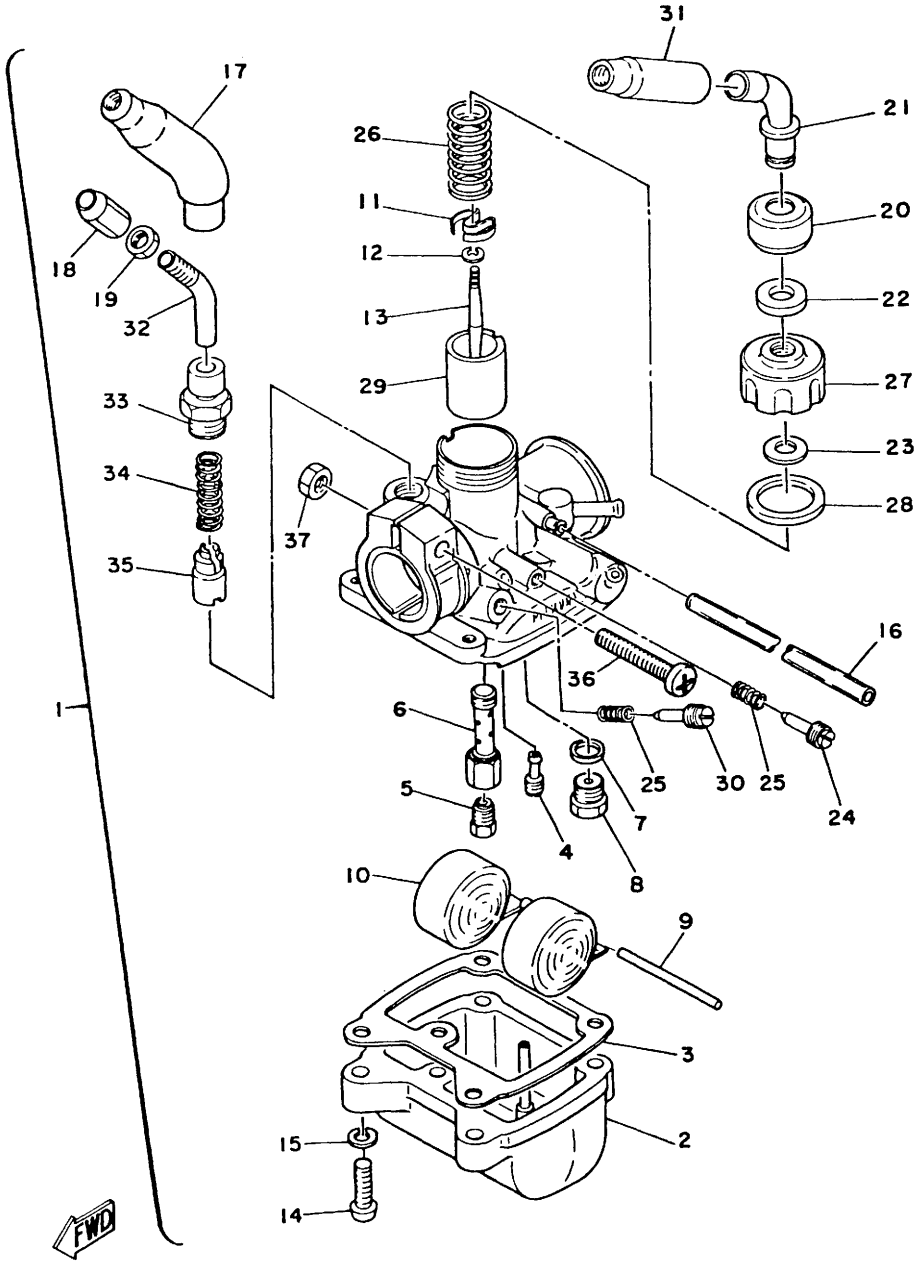

FIG. 6 CARBURETOR

REF. NO.	PART NO.	DESCRIPTION	Q'TY	REMARKS
27	1V3-14158-00	•TOP, mixing chamber	1	
28	1V3-14126-00	•GASKET	1	
29	1F5-14112-25	•VALVE, throttle 1	1	
30	127-14123-00	•SCREW, air adjusting	1	
31	439-14169-00	•CAP	1	
32	439-14155-00	•GUIDE, cable	1	
33	439-14174-01	•CAP, Plunger	1	
34	127-14135-00	•SPRING, Plunger	1	
35	127-14171-00	•PLUNGER, starter	1	
36	127-14125-01	•SCREW	1	
37	296-14164-00	•NUT, holding	1	

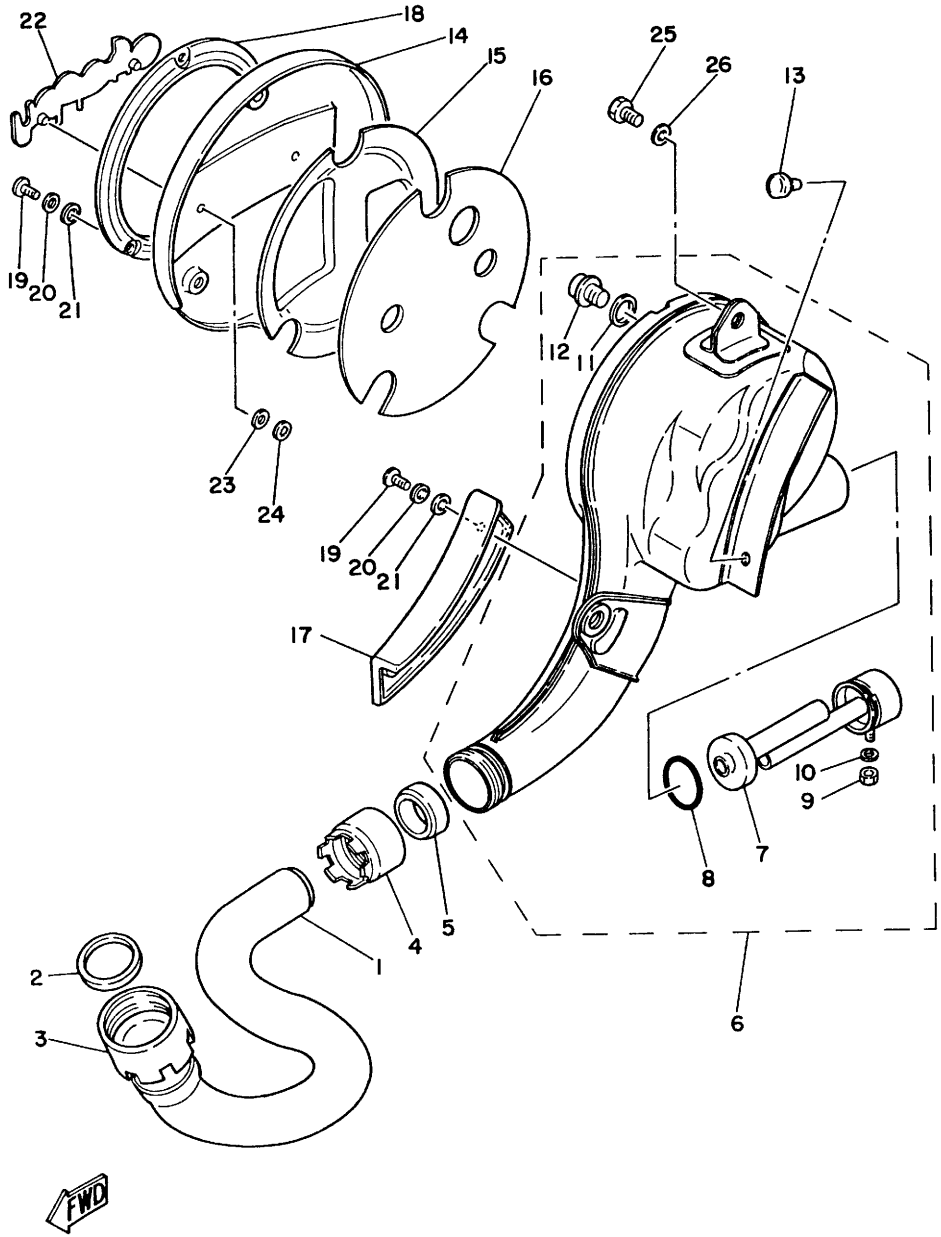

FIG. 7 EXHAUST

REF. NO.	PART NO.	DESCRIPTION	Q'TY	REMARKS
1	439-14611-03	PIPE, exhaust 1	1	
2	132-14613-00	GASKET, exhaust PiPe	1	
3	1L4-14612-00	NUT, ring	1	
4	395-14713-00	NUT, muffler joint	1	
5	3T5-14714-00	GASKET, muffler	1	
6	4F4-14710-00	MUFFLER ASSY 1	1	
7	4F4-14753-00-98	•SILENCER, exhaust	1	
8	93210-29375	•O-RING	1	
9	95301-05600	•NUT	1	
10	92901-05600	•WASHER, Plate	1	
11	137-15353-00	•GASKET, drain	1	
12	90340-14054	•PLUG, straight screw	1	
13	441-14747-00	DAMPER, muffler	1	
14	4F4-14718-00	PROTECTOR, muffler 1	1	
15	4F4-14737-00	DAMPER, muffler	1	
16	4F4-14739-00	GASKET, muffler damPer 1	1	
17	4F4-14728-00	PROTECTER, muffler 2	1	
18	4F4-14727-00	EMBLEM, Protector	1	
19	98906-06010	SCREW, bind	5	
20	90202-06010	WASHER, Plate	5	
21	90430-06012	GASKET	5	
22	4F4-14729-00	EMBLEM, Protector	1	
23	90202-04003	WASHER, Plate	2	
24	116-28317-00	NUT, emblem	2	
25	97301-08016	BOLT	1	
26	92901-08600	WASHER, Plate	1	

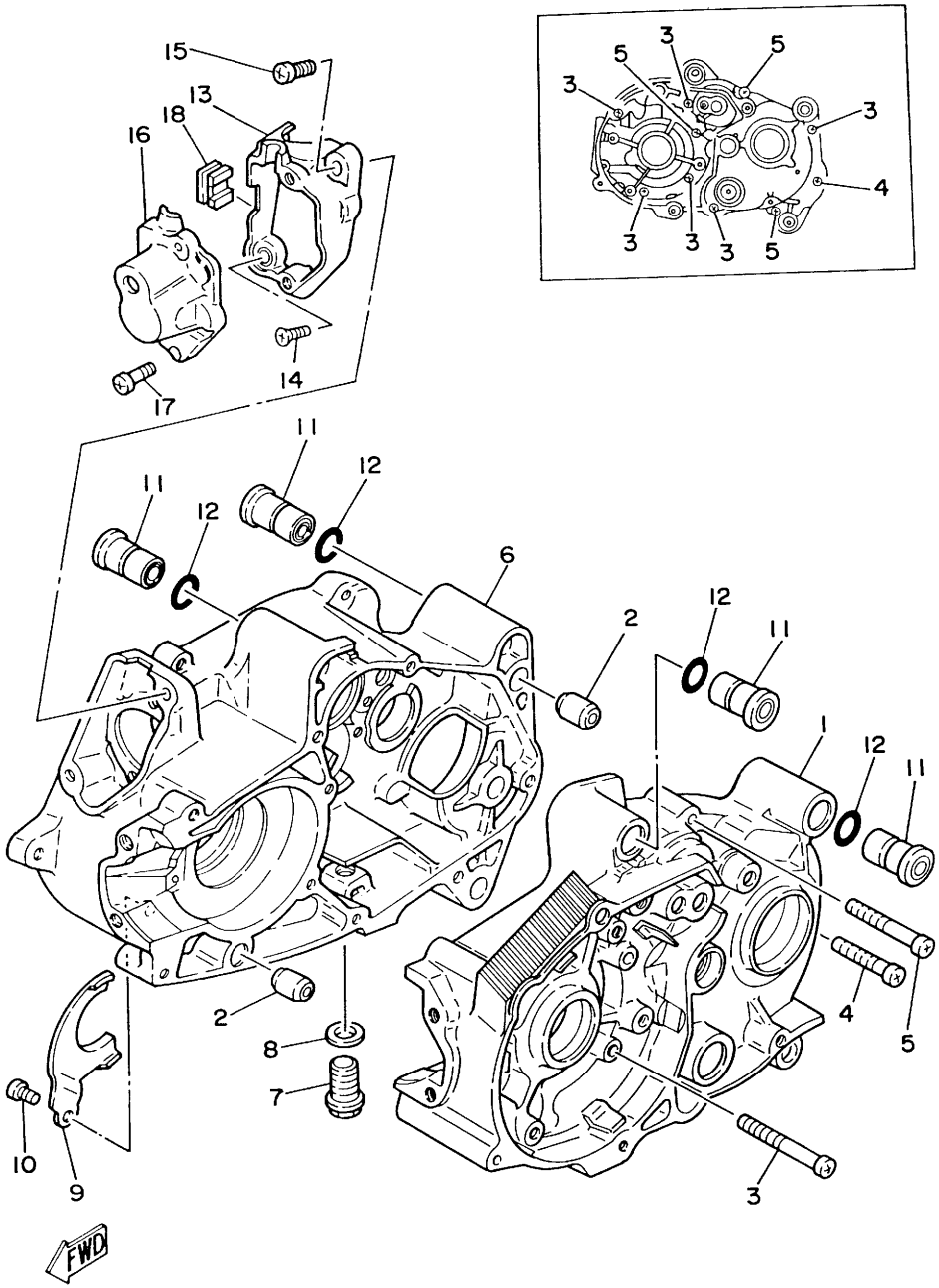

FIG. 8 CRANKCASE

REF. NO.	PART NO.	DESCRIPTION	Q'TY	REMARKS
1	442-15111-03	CRANKCASE 1	1	
2	91830-22016	PIN, dowel	2	
3	92501-06050	SCREW, Pan head	6	
4	92501-06035	SCREW, Pan head	1	
5	92501-06045	SCREW, Pan head	3	
6	442-15121-04	CRANKCASE 2	1	
7	90340-12005	PLUG, straight screw	1	
8	90430-12038	GASKET	1	
9	296-15128-00	HOLDER	1	
10	92501-08010	SCREW, Pan head	1	
11	530-15317-00	SPACER, engine mount	4	
12	93210-12327	O-RING	4	
13	439-15416-02	COVER, oil PumP	1	
14	92701-06012	SCREW, flat head	1	
15	92501-06014	SCREW, Pan head	1	
16	439-15426-03	COVER, oil PumP 2	1	
17	92501-06014	SCREW, Pan head	2	
18	90480-16179	GROMMET	1	

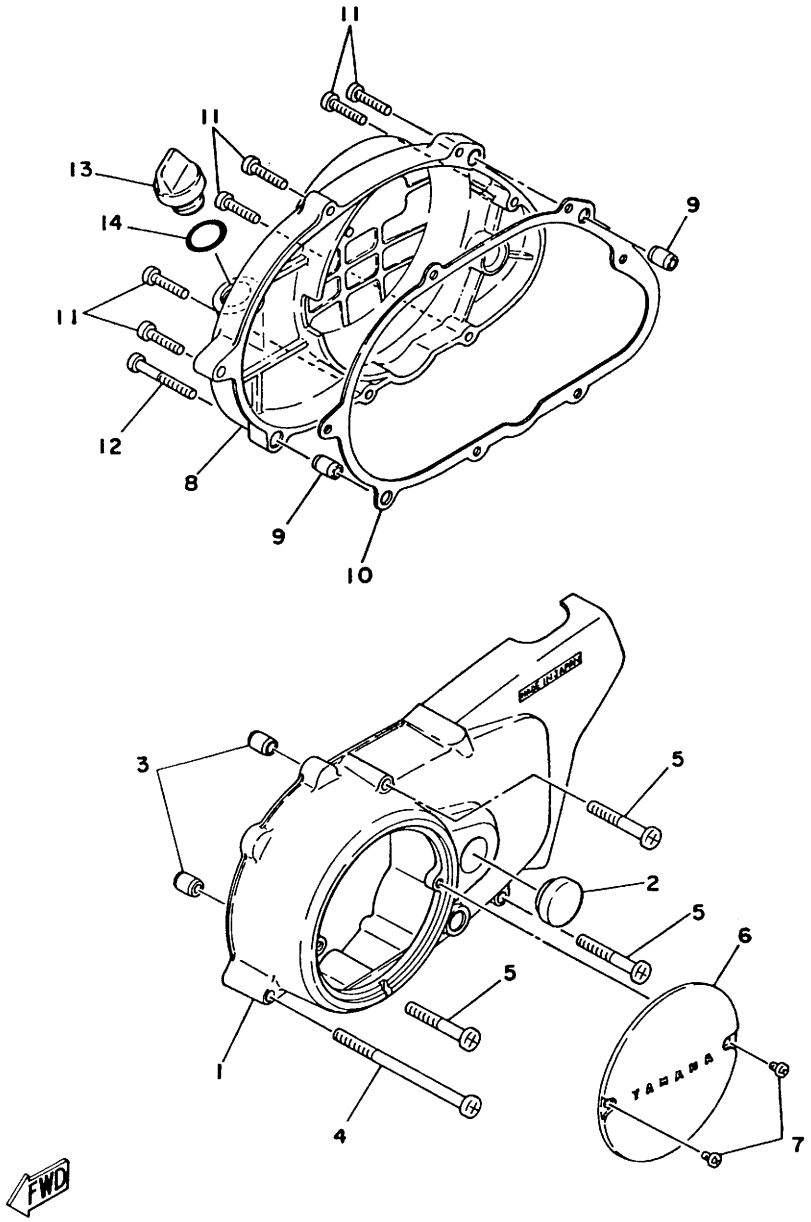

FIG. 9 CRANKCASE COVER

REF. NO.	PART NO.	DESCRIPTION	Q'TY	REMARKS
1	1M3-15411-00	COVER, crankcase 1	1	
2	257-15417-01	COVER, cap	1	
3	91830-21014	PIN, dowel	2	
4	92501-06100	SCREW, Pan head	1	
5	92501-06045	SCREW, Pan head	3	
6	164-15415-00	COVER, generator	1	
7	98501-04006	SCREW, Pan head	2	
8	441-15421-00	COVER, crankcase 2	1	
9	91830-21014	PIN, dowel	2	
10	296-15451-01	GASKET, crankcase cover	1	
11	92501-06025	SCREW, Pan head	6	
12	92501-06040	SCREW, Pan head	1	
13	353-15362-00	PLUG, oil level	1	
14	93210-21190	O-RING	1	

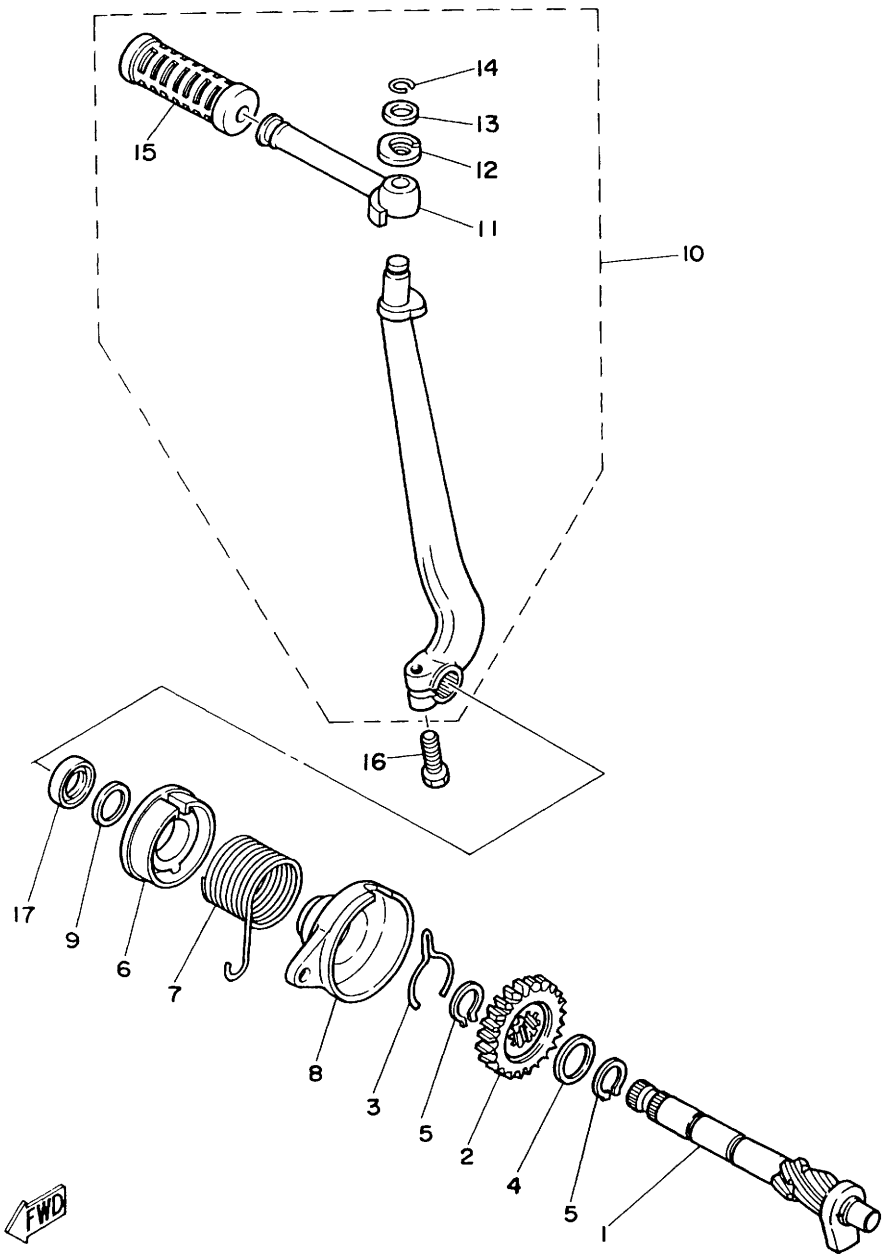

FIG. 10 KICK STARTER

REF. NO.	PART NO.	DESCRIPTION	Q'TY	REMARKS
1	1L5-15660-01	KICK AXLE ASSY	1	
2	1W7-15641-00	GEAR, kick (22T)	1	
3	1W7-15687-01	CLIP	1	
4	90201-20266	WASHER, Plate	1	
5	93410-20009	CIRCLIP	2	
6	3E5-15676-00	COVER, sPring	1	
7	90508-26136	SPRING, torsion	1	
8	3E5-15664-00	GUIDE, sPring	1	
9	90201-15701	WASHER, Plate (1.0T)	1	
10	439-15620-04	KICK CRANK ASSY	1	
11	122-15612-02	.LEVER, kick	1	
12	90504-18005	.SPRING, comPression	1	
13	90209-10108	.WASHER	1	
14	93440-10028	.CIRCLIP	1	
15	156-15618-01	.COVER, kick lever	1	
16	97311-06025	BOLT	1	
17	93109-15001	OIL SEAL	1	

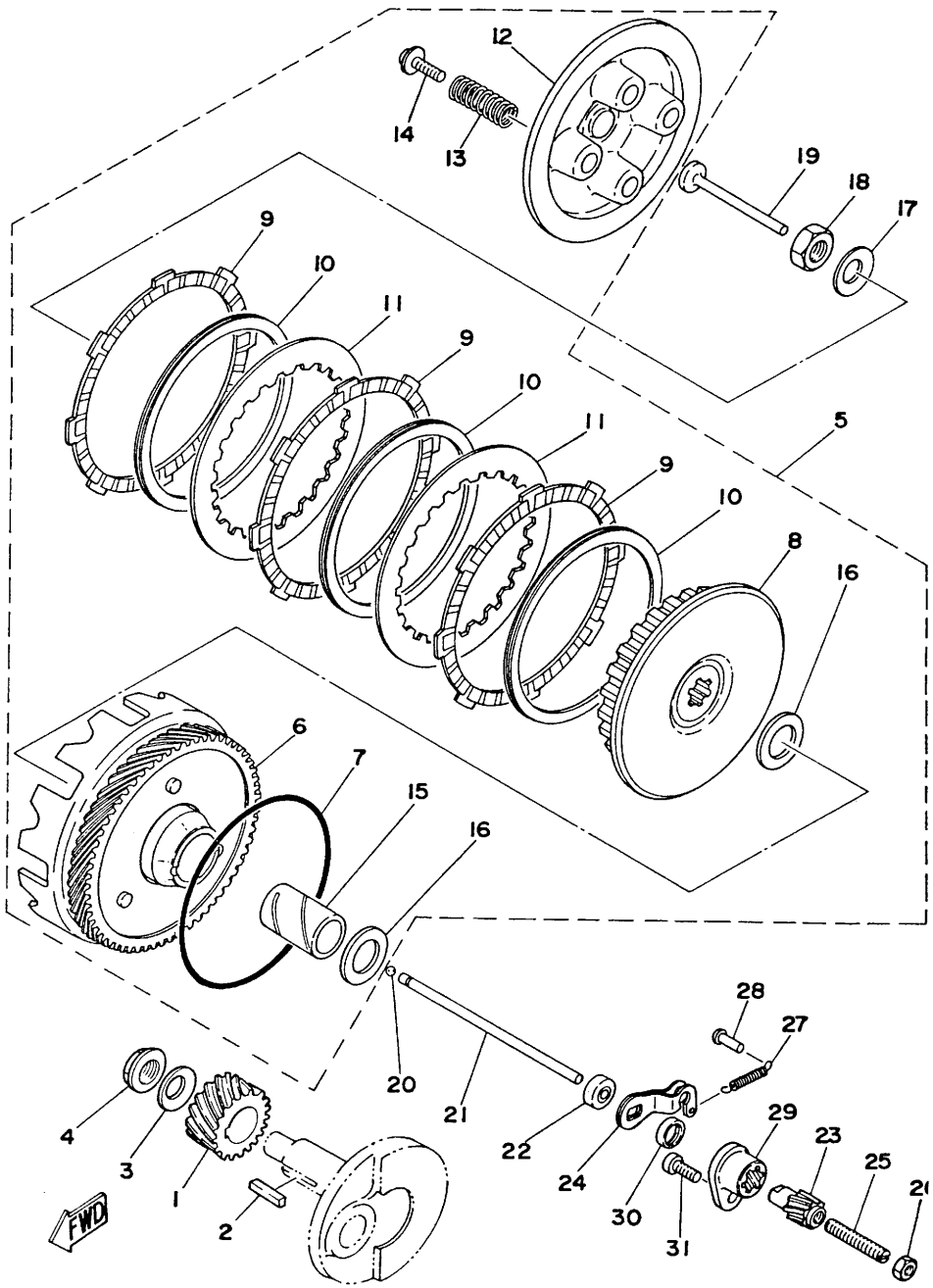

FIG. 11 CLUTCH

REF. NO.	PART NO.	DESCRIPTION	Q'TY	REMARKS
1	401-16111-00-20	GEAR, Primary drive	1	UR
	401-16111-00-30	GEAR, Primary drive	1	UR
	401-16111-00-40	GEAR, Primary drive	1	UR
2	90282-05005	KEY, straight	1	
3	90208-12015	WASHER, conical spring	1	
4	90179-12244	NUT	1	
5	1L5-16301-00	CLUTCH ASSY	1	
6	1L5-16150-00-20	•PRIMARY DRIVEN GEAR COMP.	1	UR
	1L5-16150-00-30	•PRIMARY DRIVEN GEAR COMP.	1	UR
	1L5-16150-00-40	•PRIMARY DRIVEN GEAR COMP.	1	UR
7	93210-98202	•O-RING	1	
8	353-16371-00	•BOSS, clutch	1	
9	131-16321-00	•PLATE, friction	3	
10	131-16367-00	•RING, cushion	3	
11	257-16324-00	•PLATE, clutch 1	2	
12	353-16351-00	•PLATE, Pressure 1	1	
13	90501-20125	•SPRING, compression	4	
14	90119-05001	•BOLT, with washer	4	
15	90560-17150	•SPACER	1	
16	122-16164-00	•PLATE, thrust 2	2	
17	90208-12015	WASHER, conical spring	1	
18	90170-12060	NUT	1	
19	137-16356-00	ROD, Push 1	1	
20	93503-16010	BALL	1	
21	353-16357-00	ROD, Push 2	1	
22	257-15389-00	SEAL, Push rod	1	
23	241-16341-01	SCREW, Push	1	
24	451-16342-00	LEVER, Push	1	

B13

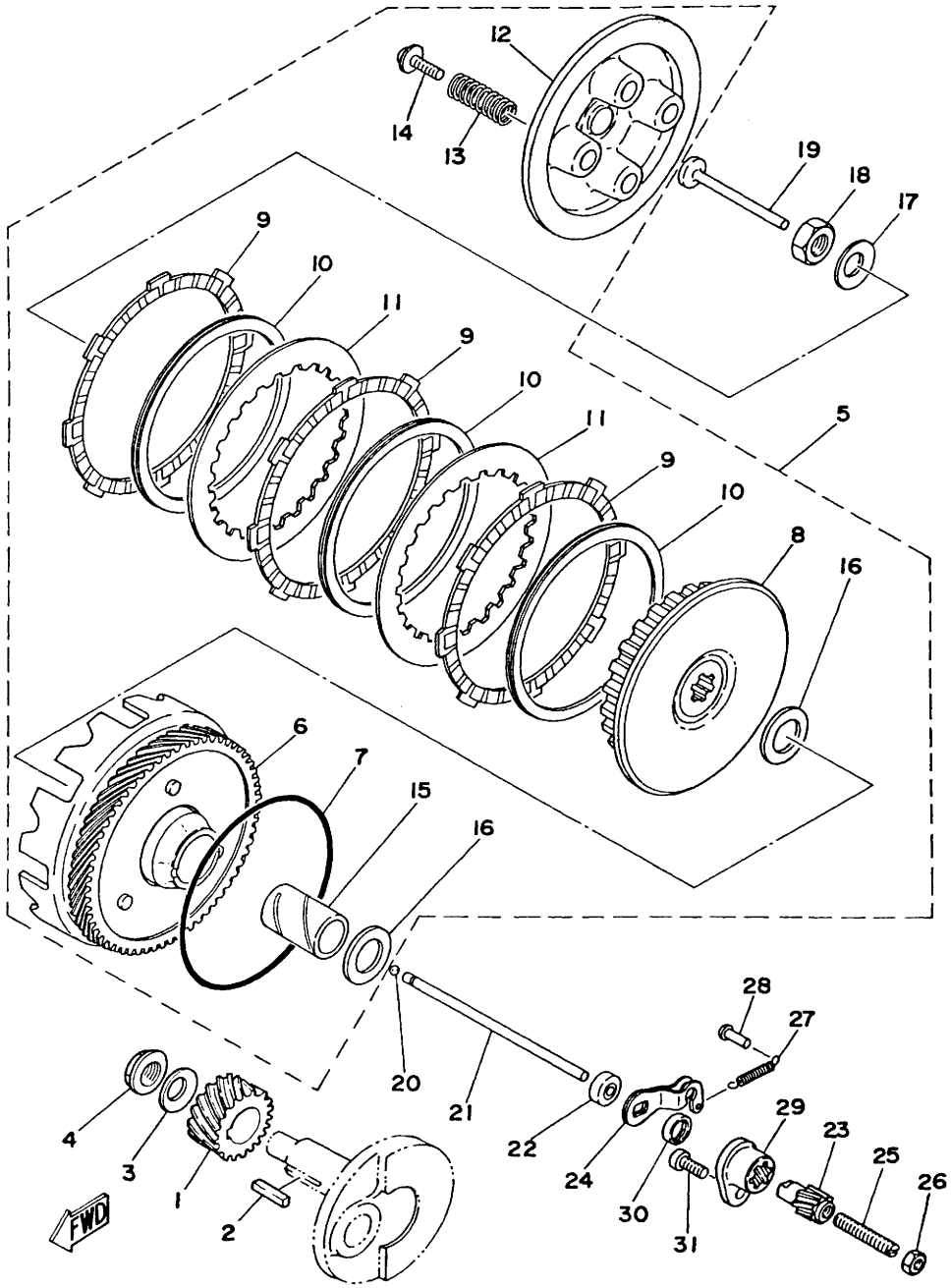

FIG. 11 CLUTCH

REF. NO.	PART NO.	DESCRIPTION	Q'TY	REMARKS
25	90113-06013	BOLT, set	1	
26	95301-06700	NUT	1	
27	90506-07066	SPRING, tension	1	
28	132-16346-00	HOOK, sPring	1	
29	353-16396-00	HOUSING, Push screw	1	
30	93104-11028	OIL SEAL	1	
31	92501-06014	SCREW, Pan head	1	

B14

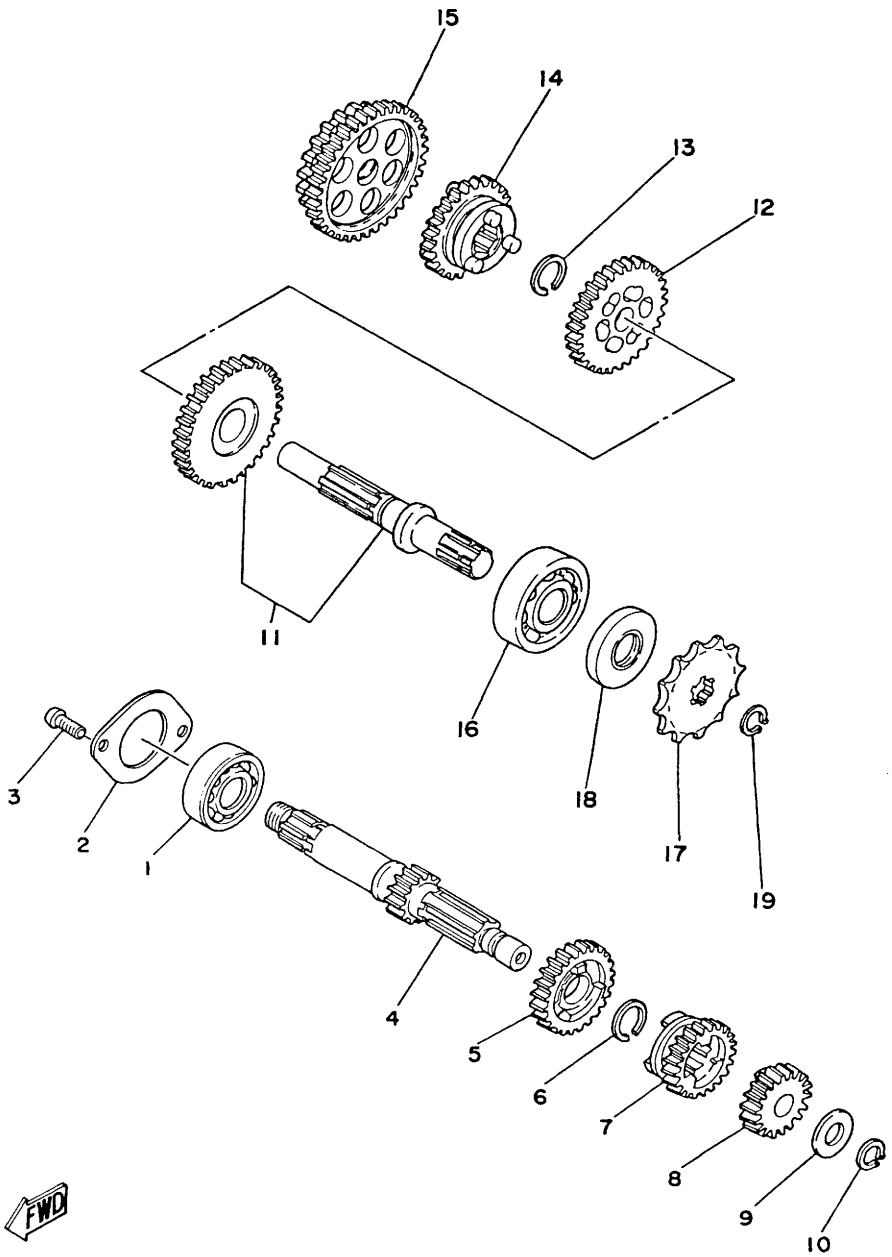

FIG. 12 TRANSMISSION

REF. NO.	PART NO.	DESCRIPTION	Q'TY	REMARKS
1	93306-20309	BEARING (B6203)	1	
2	296-17471-00	PLATE, cover	1	
3	92501-06012	SCREW, Pan head	2	
4	441-17411-01	AXLE, main (12T)	1	
5	353-17141-12	GEAR, 4th Pinion (24T)	1	
6	93440-16030	CIRCLIP	1	
7	353-17131-00	GEAR, 3rd Pinion (21T)	1	
8	353-17121-11	GEAR, 2nd Pinion (17T)	1	
9	90201-12179	WASHER, Plate	1	
10	93410-12003	CIRCLIP	1	
11	1L5-17420-01	DRIVE AXLE ASSY	1	
12	441-17231-00	GEAR, 3rd wheel (30T)	1	
13	93440-16030	CIRCLIP	1	
14	353-17241-00	GEAR, 4th wheel (27T)	1	
15	1L5-17211-02	GEAR, 1st wheel (27T/39T)	1	
16	93306-30301	BEARING (B6303)	1	
17	257-17461-51	SPROCKET, drive (15T)	1	UR STD
	257-17461-31	SPROCKET, drive (13T)	1	UR
	257-17461-41	SPROCKET, drive (14T)	1	UR
18	93102-17171	OIL SEAL	1	
19	93410-16007	CIRCLIP	1	

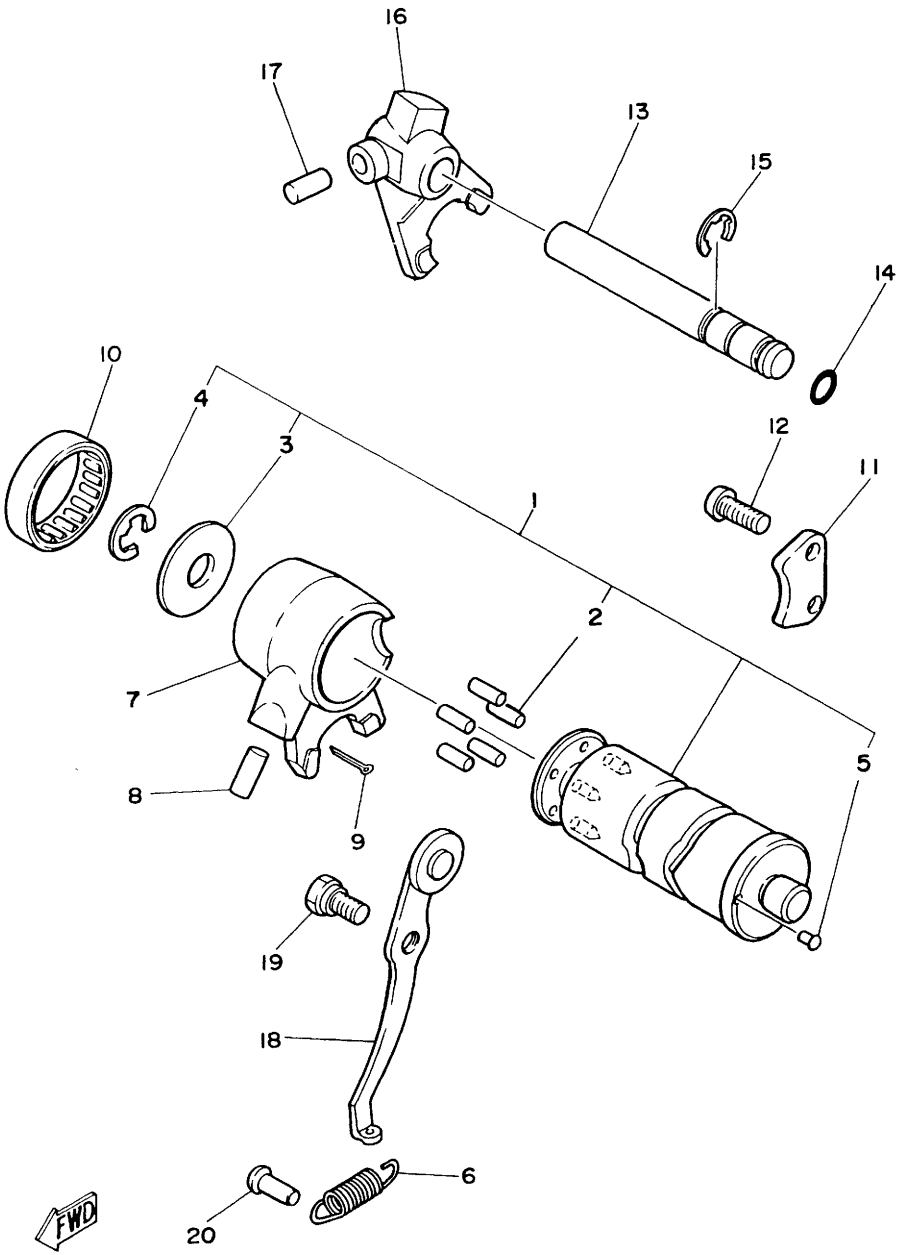

FIG. 13 SHIFT CAM.FORK

REF. NO.	PART NO.	DESCRIPTION	Q'TY	REMARKS
1	2T6-18540-00	SHIFT CAM ASSY	1	
2	93604-22050	.PIN, dowel	5	
3	296-18561-00	.PLATE, side 1	1	
4	93430-09019	.CIRCLIP	1	
5	136-18542-00	.POINT, neutral	1	
6	90506-10184	SPRING, tension	1	
7	425-18511-00	FORK, shift 1	1	
8	93606-14081	PIN, dowel	1	
9	91401-25020	PIN, cotter	1	
10	93315-23208	BEARING, cylindrical	1	
11	296-18562-01	PLATE, stoPPer 2	1	
12	92501-06014	SCREW, Pan head	2	
13	441-18531-02	BAR, shift fork guide 1	1	
14	93210-08006	O-RING	1	
15	93430-10016	CIRCLIP	1	
16	353-18512-01	FORK, shift 2	1	
17	93606-14081	PIN, dowel	1	
18	441-18140-00	STOPPER LEVER ASSY	1	
19	90109-06001	BOLT	1	
20	132-16346-00	HOOK, sPring	1	

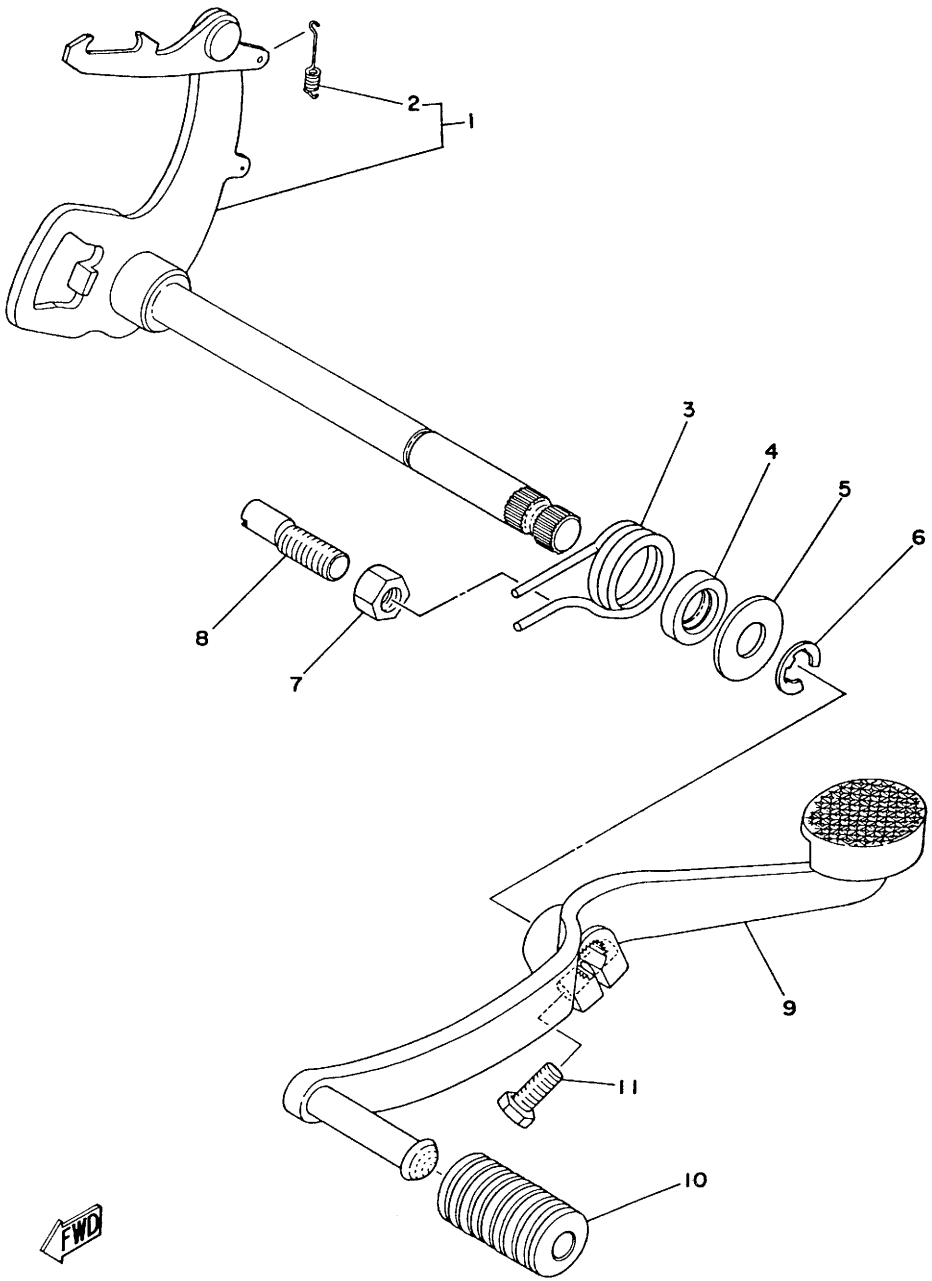

FIG. 14 SHIFT SHAFT.PEDAL

REF. NO.	PART NO.	DESCRIPTION	Q'TY	REMARKS
1	3E1-18101-00	SHIFT SHAFT ASSY	1	
2	90506-08122	.SPRING, tension	1	
3	90508-32263	SPRING, torsion	1	
4	93101-12004	OIL SEAL	1	
5	90201-12575	WASHER, Plate	1	
6	93430-10016	CIRCLIP	1	
7	95301-08600	NUT	1	
8	90149-08094	SCREW	1	
9	441-18111-01-91	PEDAL, shift	1	uni chrome
10	132-18113-01	COVER, shift Pedal	1	
11	97321-06020	BOLT	1	

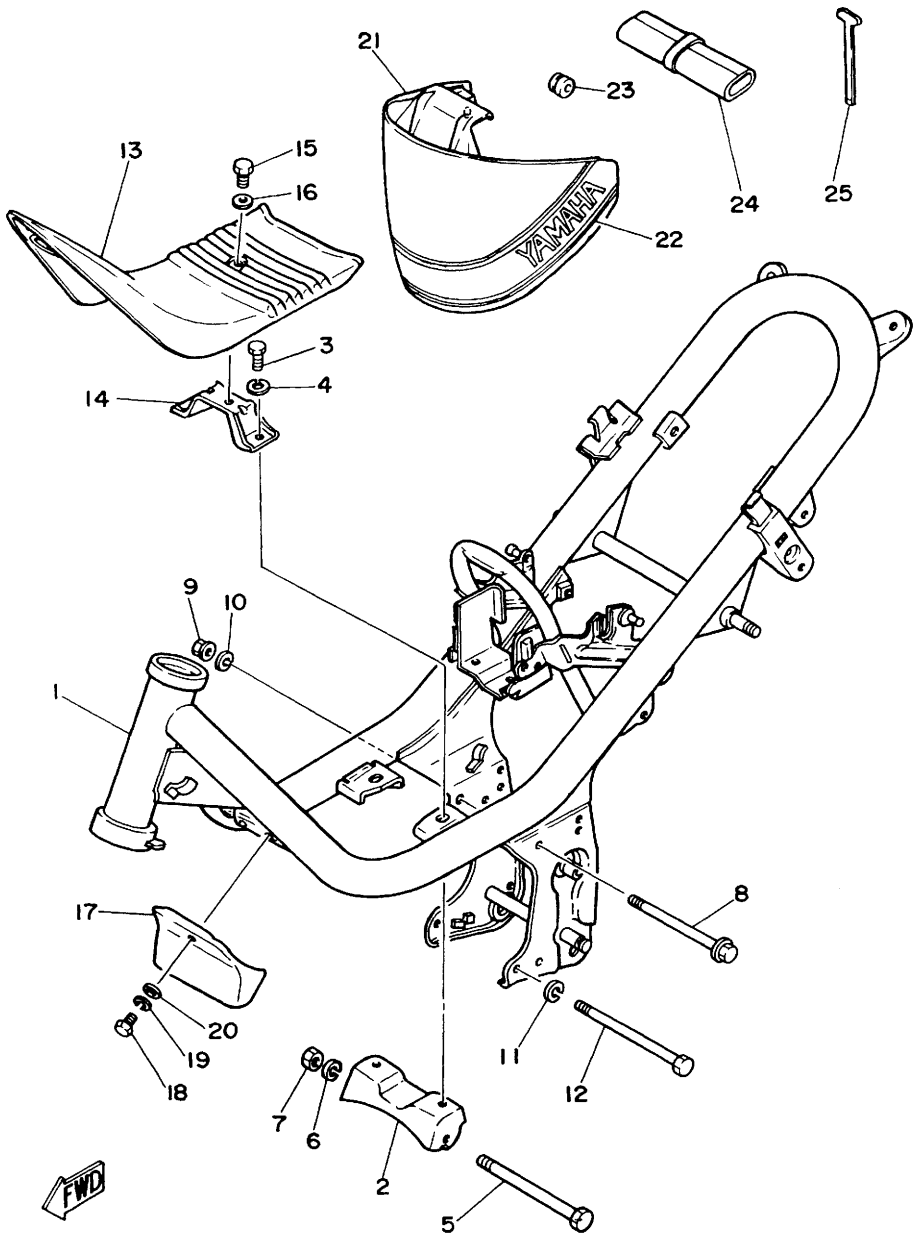

FIG. 15 FRAME. TOOL

REF. NO.	PART NO.	DESCRIPTION	Q'TY	REMARKS
1	4F4-21110-00-33	FRAME COMP	1	yamaha black
2	439-21421-00-33	STAY, engine	1	yamaha black
3	97321-08016	BOLT	2	
4	92901-08100	WASHER, spring	2	
5	90109-08386	BOLT	1	
6	92901-08100	WASHER, spring	1	
7	90170-08158	NUT	1	
8	95821-08120	BOLT, flange	1	
9	95701-08100	NUT, flange	1	
10	92901-08100	WASHER, spring	1	
11	92901-08100	WASHER, spring	1	
12	90101-08285	BOLT	1	
13	4F4-28385-01-36	COVER, lower	1	clean white
14	439-28321-00	STAY, leg shield (L.H)	1	
15	97301-06016	BOLT	2	
16	90201-06052	WASHER, plate	2	
17	439-21629-00	GUARD, mud	1	
18	97301-06016	BOLT	1	
19	92901-06100	WASHER, spring	1	
20	92901-06600	WASHER, plate	1	
21	4F4-24796-00-E1	COVER	1	UR chappy red
	4F4-24796-00-L3	COVER	1	UR competition light green
	4F4-24796-00-1A	COVER	1	UR new white
	4F4-24796-00-26	COVER	1	UR competition yellow
	4F4-24796-00-29	COVER	1	UR candy blue
22	4F4-21783-00	EMBLEM 3	1	UR
	4F4-21783-10	EMBLEM 3	1	UR
	4F4-21783-20	EMBLEM 3	1	UR

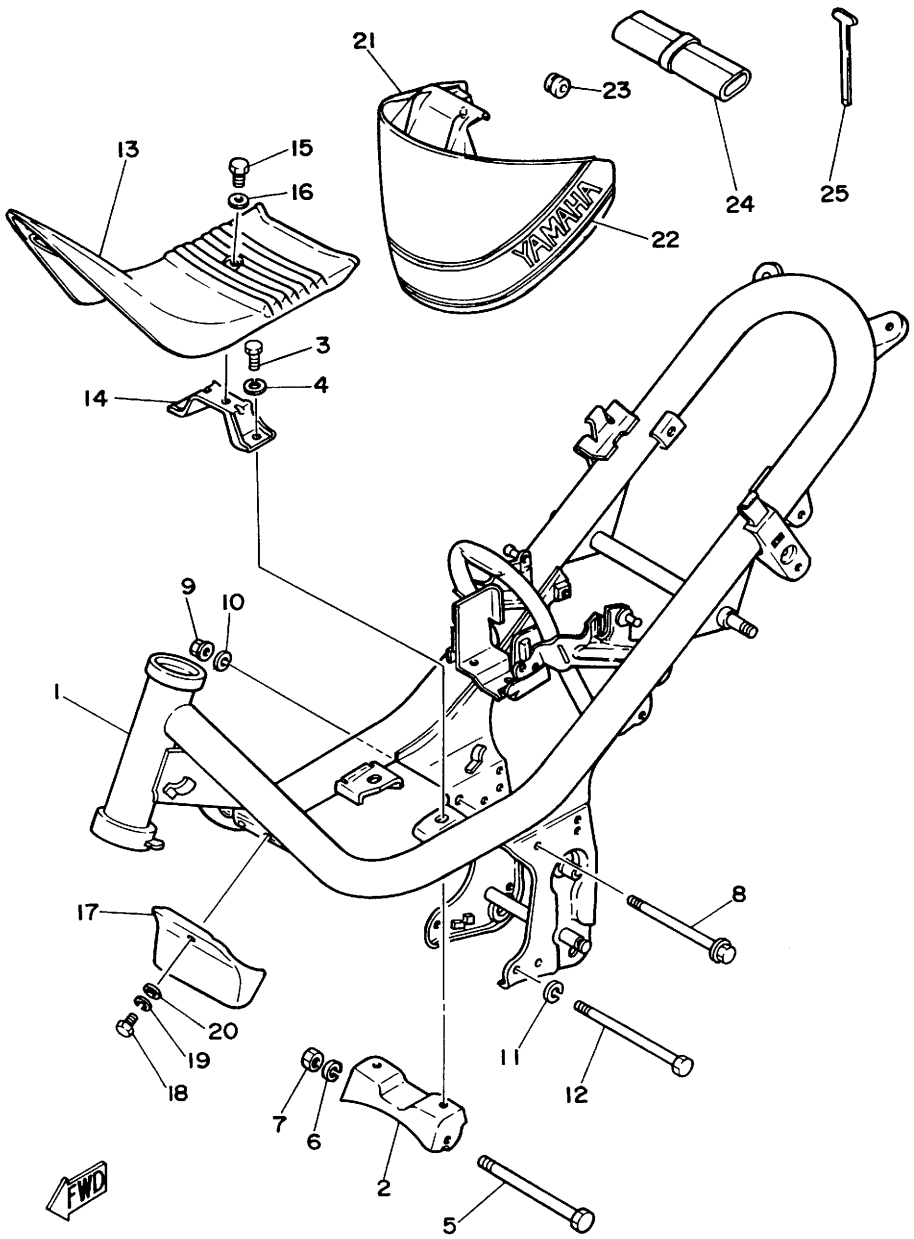

FIG. 15 FRAME. TOOL

REF. NO.	PART NO.	DESCRIPTION	Q'TY	REMARKS
23	90480-12053	GROMMET	2	
24	561-28100-11	TOOL KIT	1	
25	441-15361-01	GAUGE, level	1	

C5

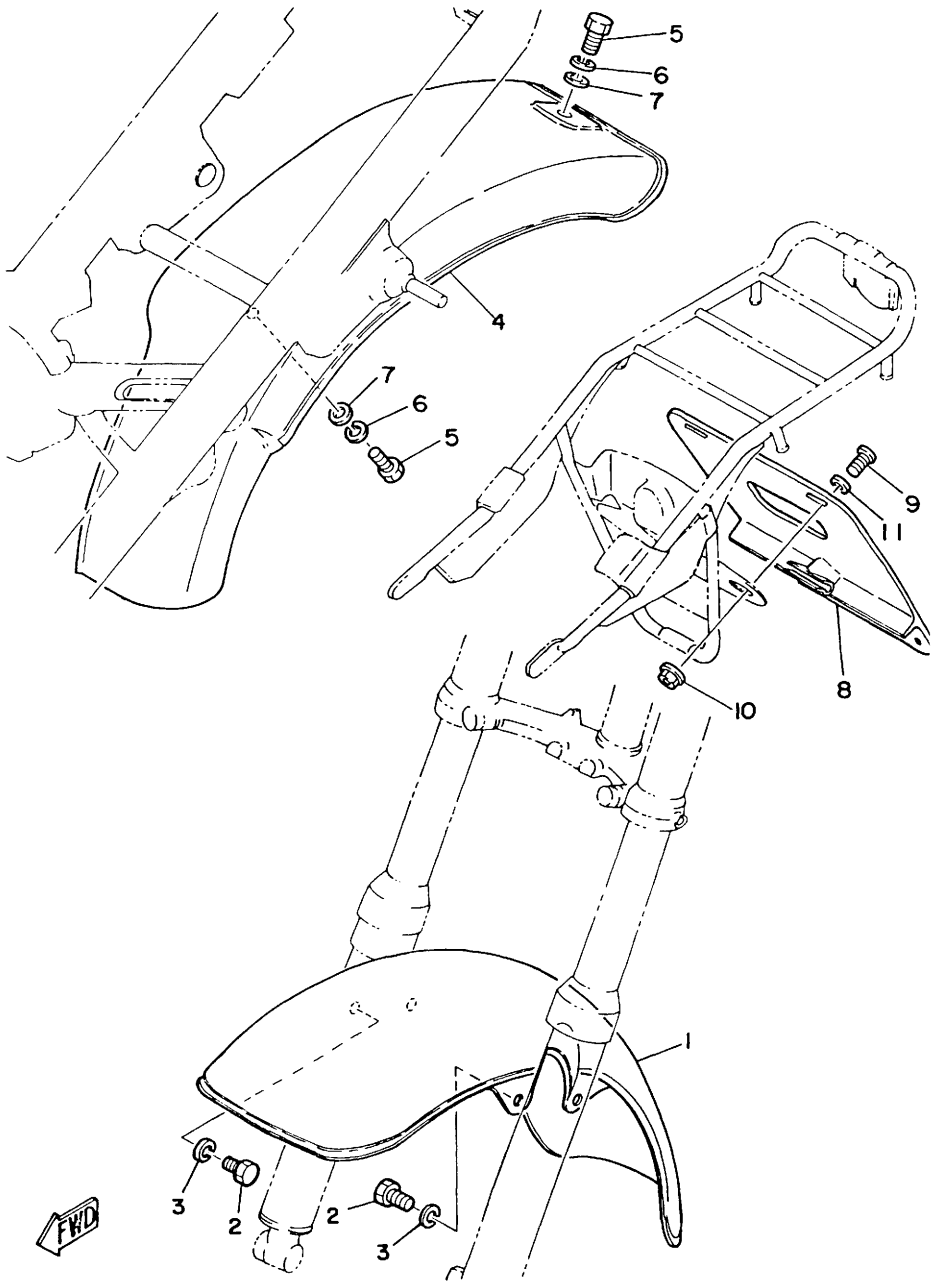

FIG. 16 FRONT FENDER.REAR FENDER

REF. NO.	PART NO.	DESCRIPTION	Q'TY	REMARKS
1	441-21510-00-93	FRONT FENDER COMP.	1	chrome-Plated
2	97301-06012	BOLT	4	
3	92901-06100	WASHER, sPring	4	
4	441-21611-00-93	FENDER, rear	1	chrome-Plated
5	97301-06012	BOLT	2	
6	92901-06100	WASHER, sPring	2	
7	92901-06600	WASHER, Plate	2	
8	439-28189-00	PLATE, number suPPort	1	
9	97301-06020	BOLT	2	
10	95701-06100	NUT, flange	2	
11	90201-06067	WASHER, Plate	2	

C6

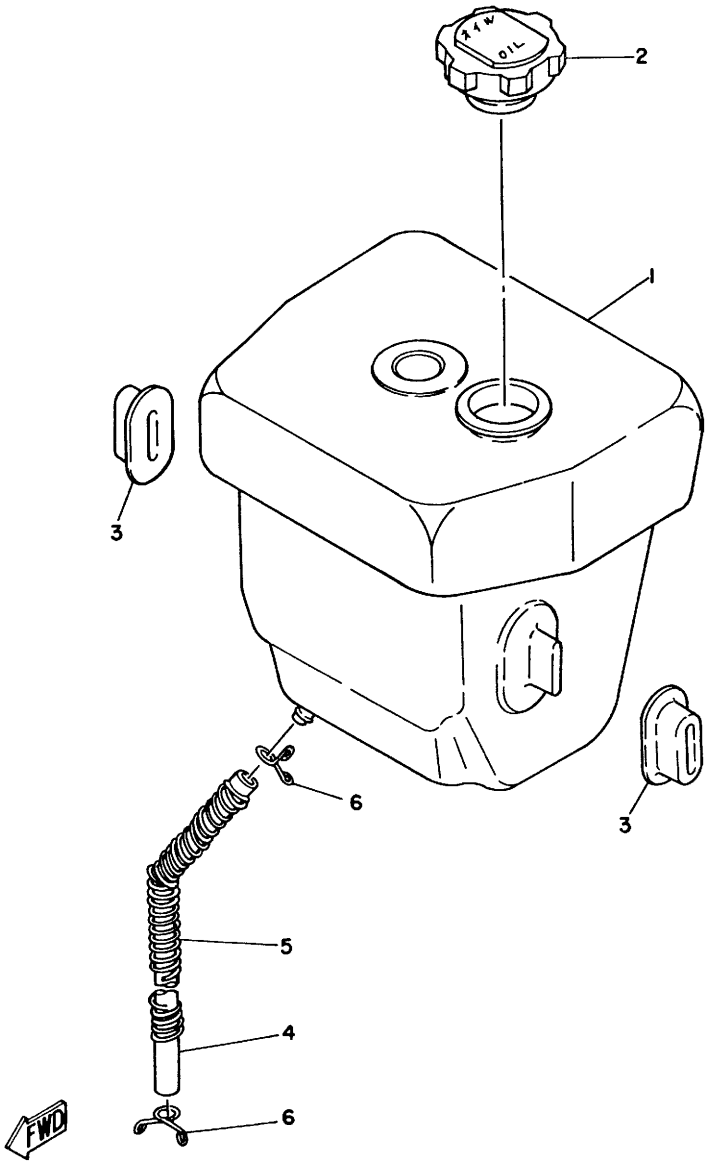

FIG. 17 OIL TANK

REF. NO.	PART NO.	DESCRIPTION	Q'TY	REMARKS
1	4F4-21751-01	TANK, oil	1	
2	3L5-21770-01	OIL TANK CAP ASSY	1	
3	439-21778-01	DAMPER, locating 1	2	
4	90445-09300	HOSE	1	
5	90504-06020	SPRING, compression	1	
6	90467-08003	CLIP	2	

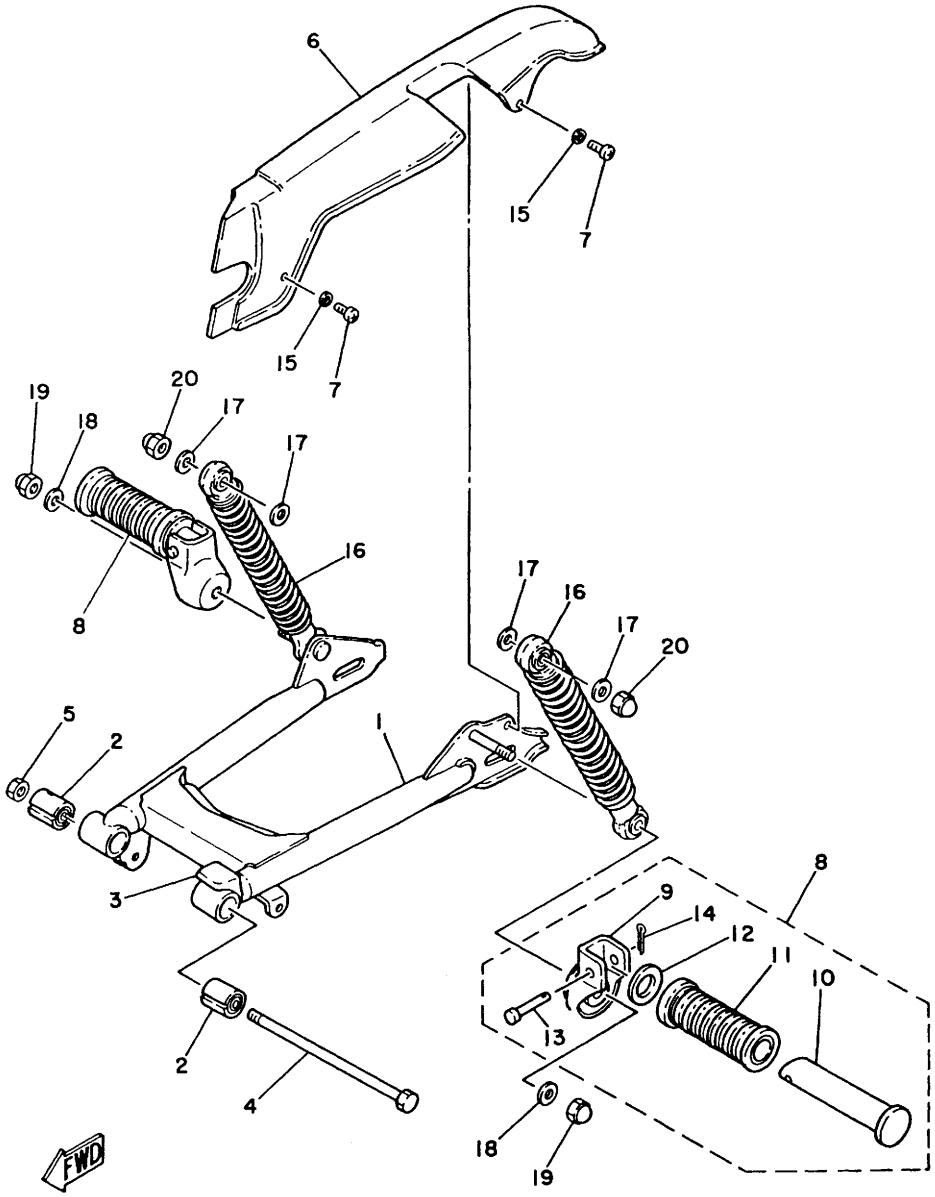

FIG. 18 REAR ARM.SUSPENSION

REF. NO.	PART NO.	DESCRIPTION	Q'TY	REMARKS
1	1L7-22110-00-33	REAR ARM COMP.	1	yamaha black
2	102-22123-00	BUSH 1	2	
3	395-22151-00	SEAL, guard	1	
4	353-22141-02	SHAFT, Pivot	1	
5	95601-10100	NUT, u	1	
6	1L4-22311-00	CASE, chain	1	
7	98501-05010	SCREW, Pan head	2	
8	1L7-27430-00	REAR FOOTREST ASSY 1	2	
9	1L7-27432-00	.BRACKET 1	1	
10	120-27431-00	.FOOTREST, rear 1	1	
11	120-27433-00	.COVER, rear footrest	1	
12	90201-20279	.WASHER, Plate	1	
13	90240-06009	.PIN, clevis	1	
14	91401-16015	.PIN, cotter	1	
15	90201-05033	WASHER, Plate	2	
16	561-22210-22	SHOCK ABSORBER ASSY, rear	2	
17	90201-12190	WASHER, Plate	4	
18	90201-12190	WASHER, Plate	2	
19	95303-12800	NUT, crown	2	
20	95303-12800	NUT, crown	2	

C8

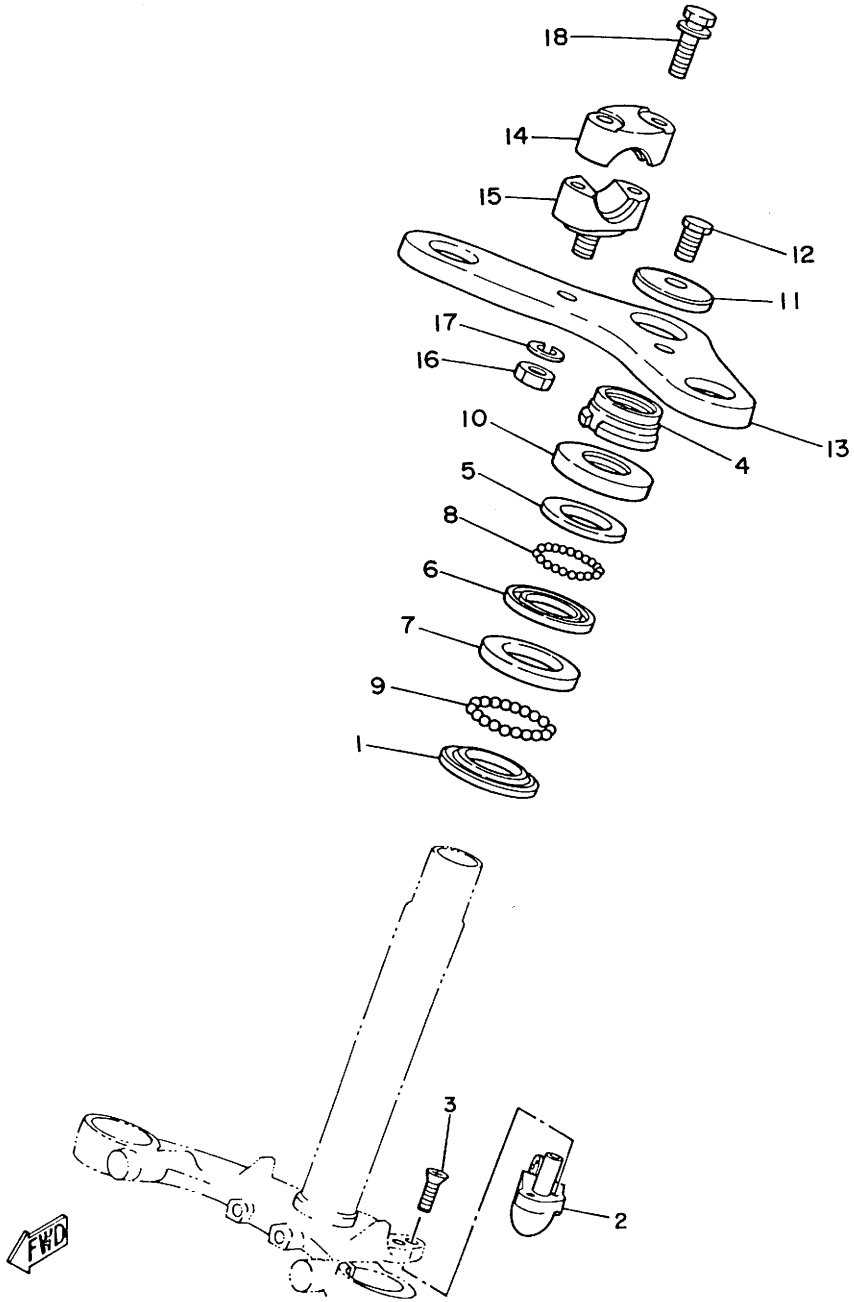

FIG. 19 STEERING

REF. NO.	PART NO.	DESCRIPTION	Q'TY	REMARKS
1	156-23411-00	RACE, ball 1	1	
2	4F4-23408-00	STEERING LOCK ASSY	1	
3	90151-06016	SCREW, countersunk	2	
4	90179-25051	NUT	1	
5	122-23411-00	RACE, ball 1	1	
6	122-23412-00	RACE, ball 2	1	
7	156-23412-00	RACE, ball 2	1	
8	93503-16010	BALL	22	
9	93501-04011	BALL	19	
10	122-23416-00	COVER, ball race 2	1	
11	90209-10021	WASHER	1	
12	90105-10006	BOLT, washer based	1	
13	439-23435-02-35	CROWN, handle	1	silver
14	122-23441-00	HOLDER, handle uPPer	2	
15	122-23442-02	HOLDER, handle lower	2	
16	95301-10600	NUT	2	
17	92901-10100	WASHER, sPring	2	
18	90119-06017	BOLT, with washer	4	

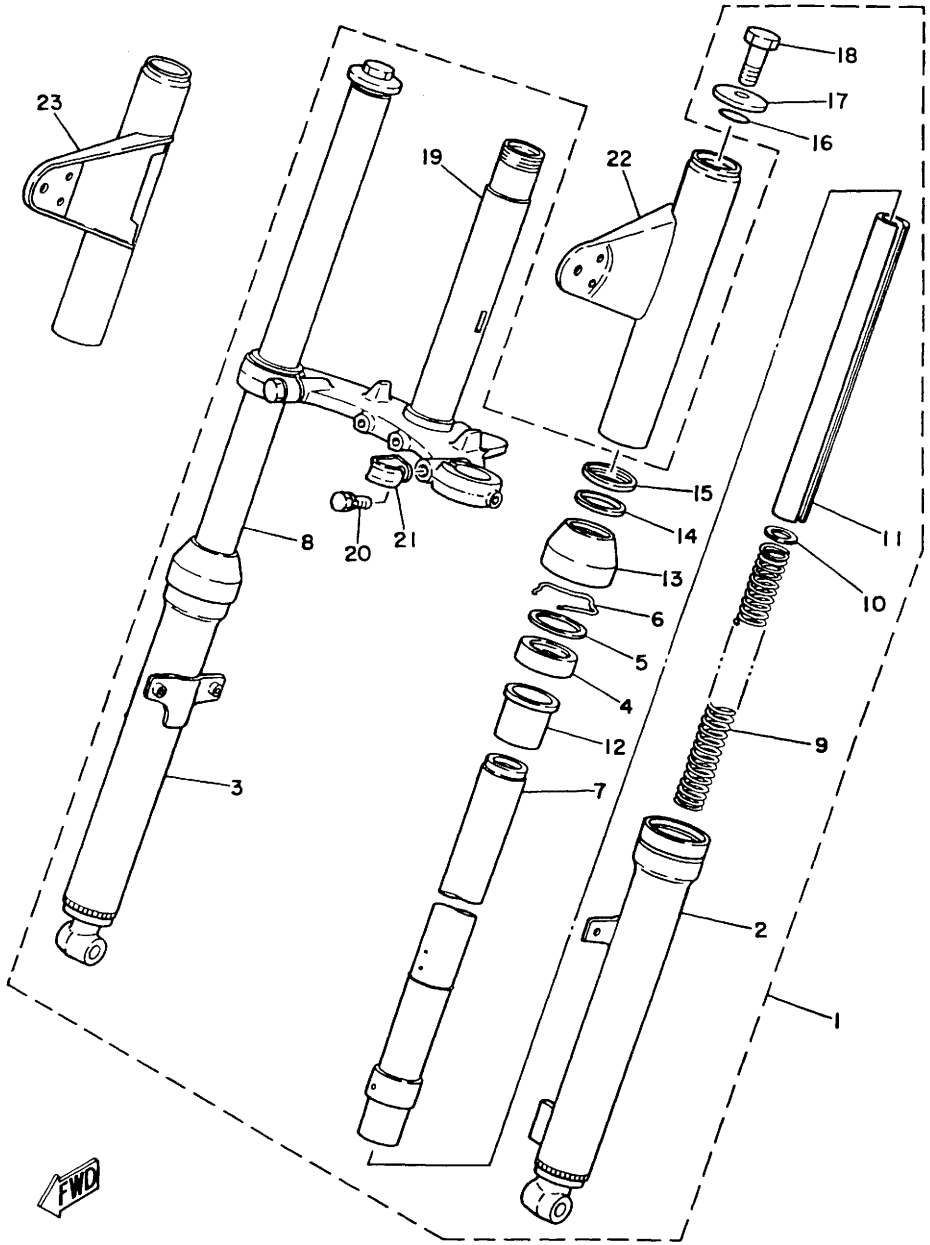

FIG. 20 FRONT FORK

REF. NO.	PART NO.	DESCRIPTION	Q'TY	REMARKS
1	4F4-23101-00	FRONT FORK ASSY	1	
2	4F4-23126-00-35	•TUBE, outer 1	1	silver
3	4F4-23136-00-35	•TUBE, outer 2	1	silver
4	367-23145-60	•OIL SEAL	2	
5	367-23146-60	•WASHER, oil seal	2	
6	1T8-23156-00	•CLIP, oil seal	2	
7	4F4-23124-00	•TUBE, inner 1	1	
8	4F4-23134-00	•TUBE, inner 2	1	
9	2T5-23141-00	•SPRING, front fork	1	
10	290-23149-00	•WASHER, spring upper	1	
11	2T5-23166-00	•SPACER, oil lock	1	
12	367-23125-60	•METAL, slide 1	2	
13	367-23144-60	•SEAL, dust	2	
14	122-23163-00	•GASKET	2	
15	354-23115-90	•GUIDE, cover upper	2	
16	307-23114-00	•GASKET	2	
17	122-23112-00	•WASHER, cap	2	
18	395-23111-00	•BOLT, cap	2	
19	2T5-23340-00-33	•UNDER BRACKET COMP.	1	yamaha black
20	1M3-23346-00	•BOLT 1	2	
21	260-23318-40	•HOLDER, cable 1	1	
22	4F4-23121-00-E1	COVER, upper 1	1	UR chappy red
	4F4-23121-00-L3	COVER, upper 1	1	UR competition light green
	4F4-23121-00-1A	COVER, upper 1	1	UR new white
	4F4-23121-00-26	COVER, upper 1	1	UR competition yellow
	4F4-23121-00-29	COVER, upper 1	1	UR candy blue
23	4F4-23131-00-E1	COVER, upper 2	1	UR chappy red
	4F4-23131-00-L3	COVER, upper 2	1	UR competition light green

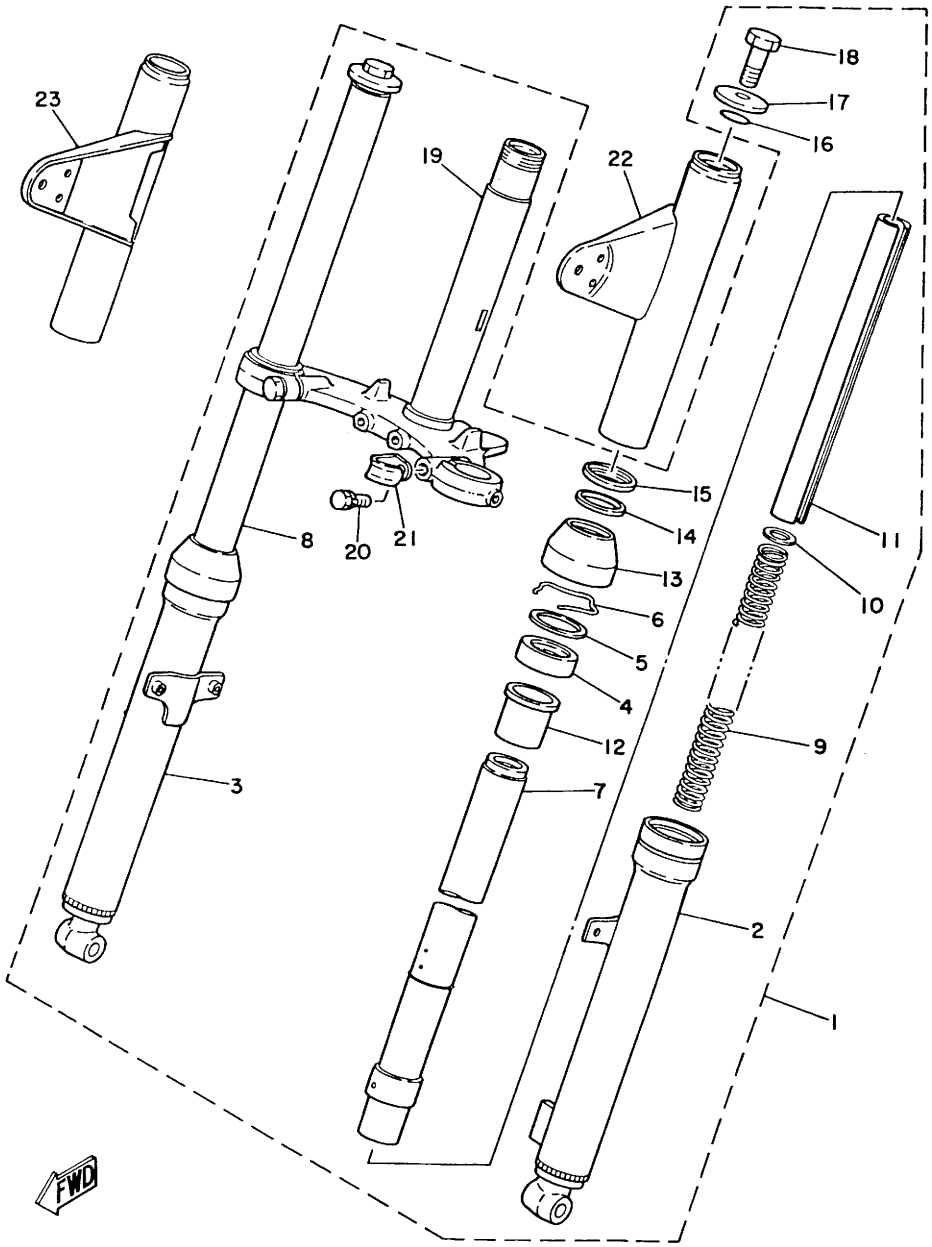

FIG. 20 FRONT FORK

REF. NO.	PART NO.	DESCRIPTION	Q'TY	REMARKS
23	4F4-23131-00-1A	COVER, uPPer 2	1	UR new white
	4F4-23131-00-26	COVER, uPPer 2	1	UR comPetition yellow
	4F4-23131-00-29	COVER, uPPer 2	1	UR candy blue

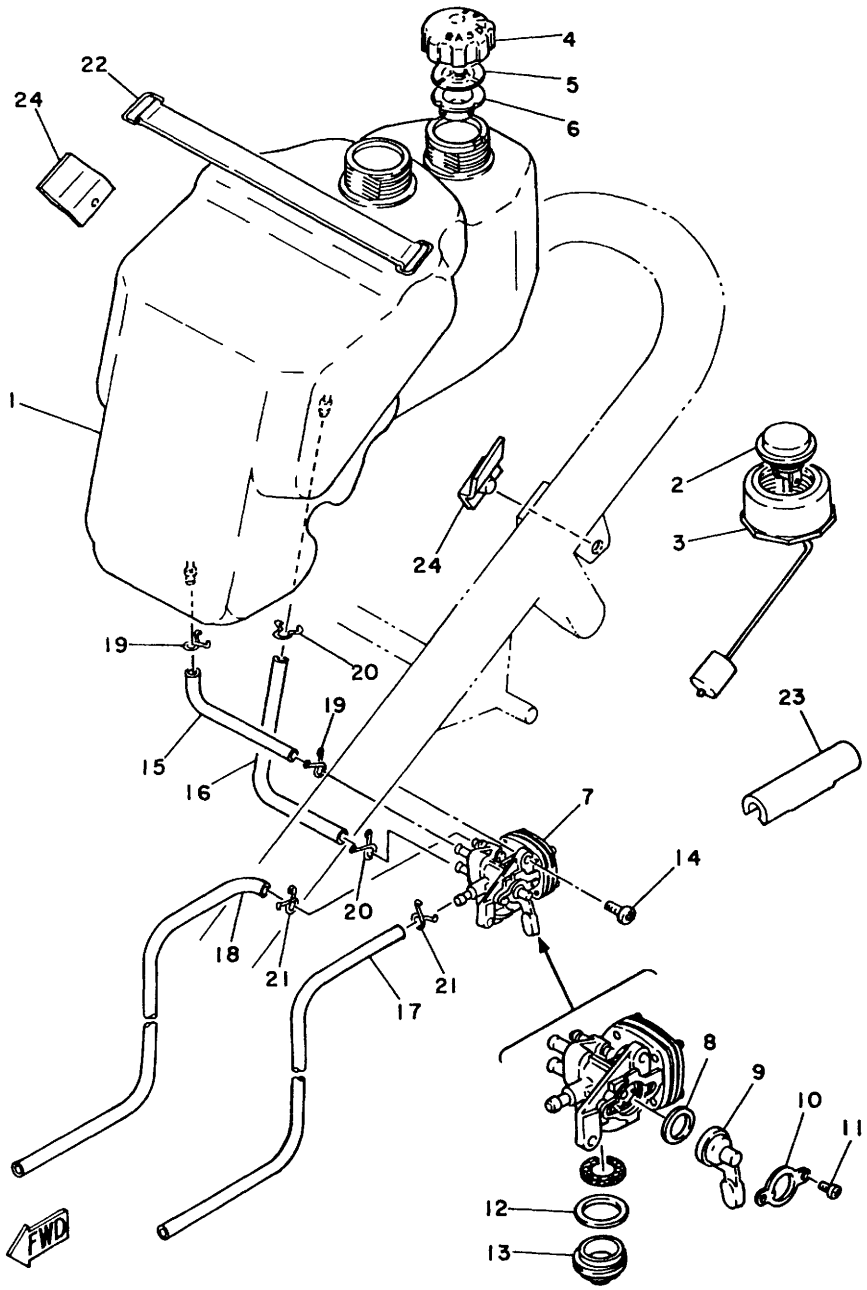

FIG. 21 FUEL TANK

REF. NO.	PART NO.	DESCRIPTION	Q'TY	REMARKS
1	4F4-24111-00	TANK, fuel	1	
2	4F4-24260-01	FUEL METER ASSY	1	
3	4J2-24261-00	HOUSING, fuel meter	1	
4	1L4-24611-00	BODY, cap	1	
5	1L4-24615-00	GASKET, Plate 1	1	
6	1L4-24616-00	GASKET, Plate 2	1	
7	439-24500-01	FUEL COCK ASSY 1	1	
8	266-24523-00	•VALVE	1	
9	439-24524-00	•LEVER, cock	1	
10	296-24518-00	•WASHER, wave	1	
11	98501-03006	•SCREW, Pan head	2	
12	266-24522-00	•GASKET	1	
13	266-24521-01	•CUP, filter	1	
14	92501-06014	SCREW, Pan head	2	
15	439-24311-00	PIPE, fuel 1	1	
16	90445-09078	HOSE	1	
17	90445-09304	HOSE	1	
18	439-24317-00	PIPE 7	1	
19	90467-08003	CLIP	2	
20	90467-08003	CLIP	2	
21	90467-08003	CLIP	2	
22	561-24173-00	BAND, tank fitting 1	1	
23	4F4-24181-00	DAMPER, locating 1	1	
24	439-24182-00	DAMPER, locating 2	2	

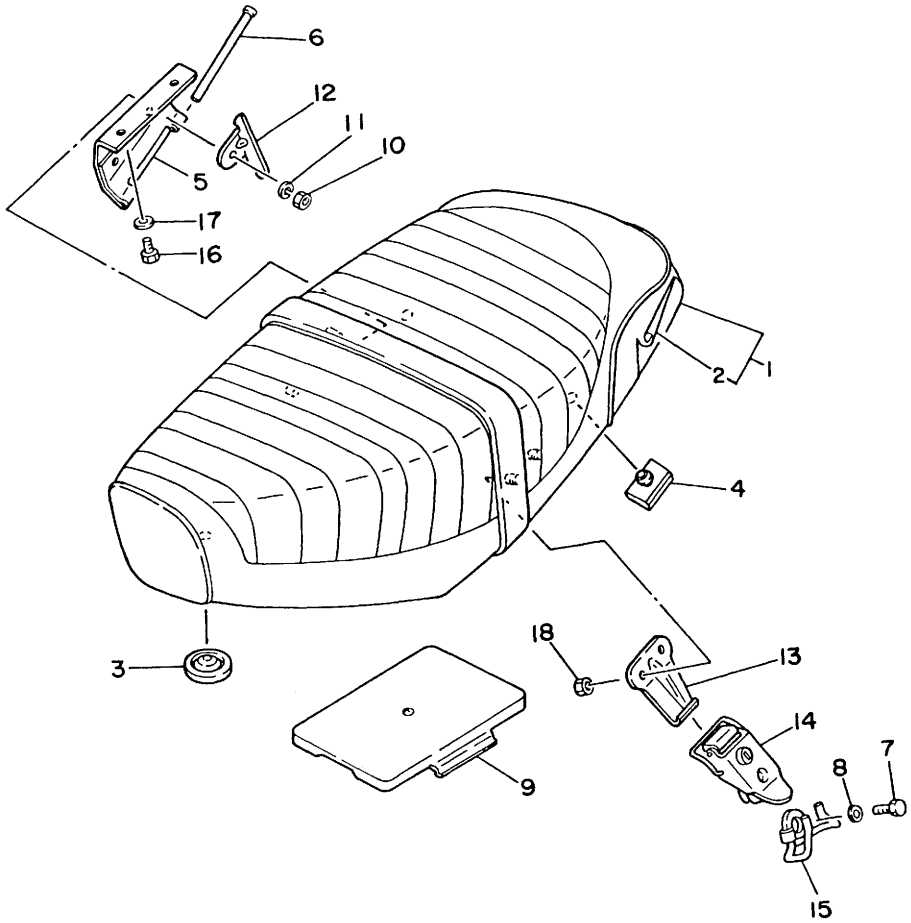

FIG. 22 SEAT

REF. NO.	PART NO.	DESCRIPTION	Q'TY	REMARKS
1	562-W2472-02	DOUBLE SEAT ASSY	1	
2	562-24731-02	•COVER, double seat	1	
3	174-24741-00	PAD, seat	1	
4	214-24724-00	DAMPER, seat	2	
5	561-24726-00	HINGE, seat	1	
6	1K8-24774-00	PIN	1	
7	97301-06025	BOLT	1	
8	92901-06600	WASHER, Plate	1	
9	395-28185-00	LID	1	
10	95301-06600	NUT	2	
11	92901-06100	WASHER, sPring	2	
12	561-24768-02	STOPPER	1	
13	561-24728-01	BRACKET, seat	1	
14	4F4-24705-00	SEAT LOCK ASSY	1	
15	341-24818-02	HOOK, helmet	1	
16	97301-06012	BOLT	2	
17	92901-06600	WASHER, Plate	2	
18	95301-06600	NUT	2	

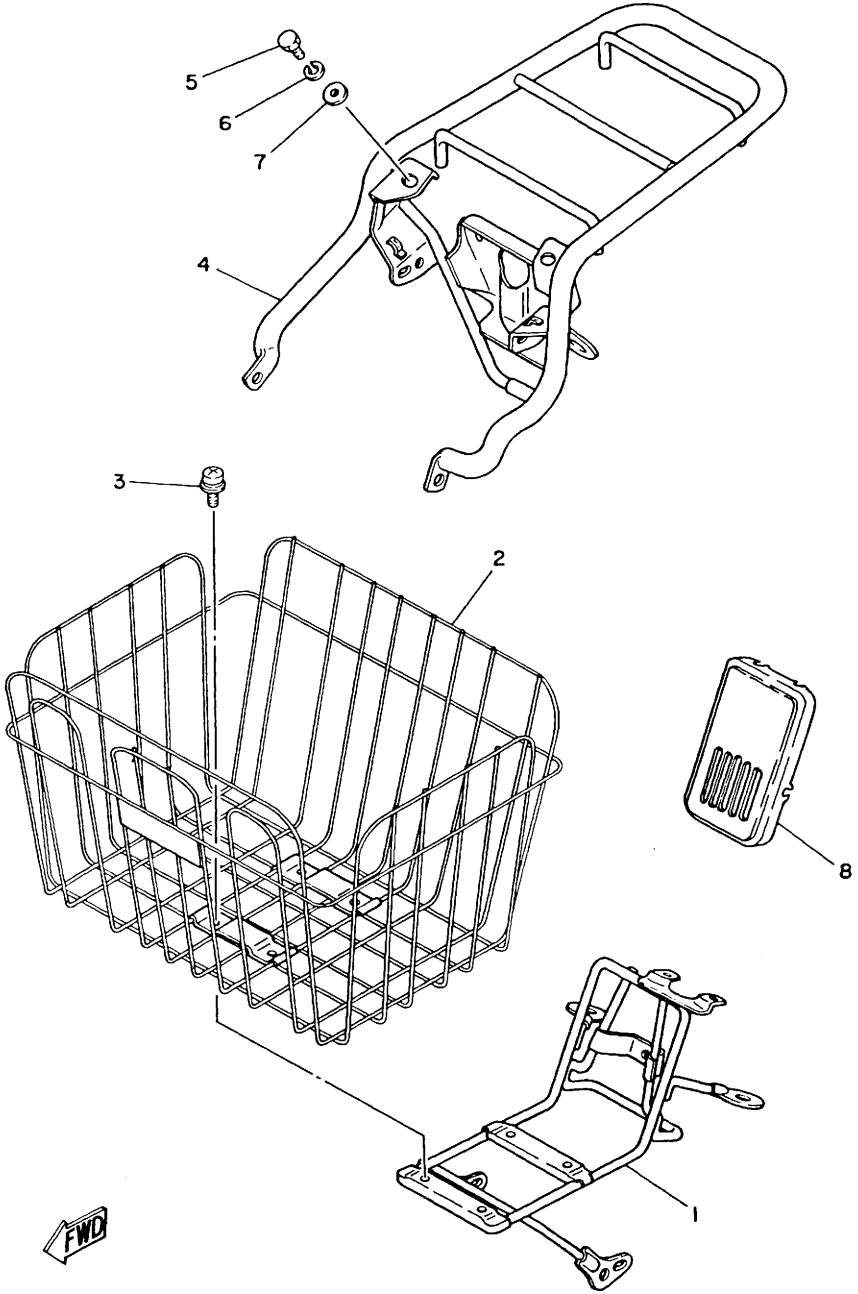

FIG. 23 CARRIER

REF. NO.	PART NO.	DESCRIPTION	Q'TY	REMARKS
1	4F4-24860-00	FRONT CARRIER ASSY	1	
2	4F4-24865-00	BASKET, front	1	
3	90159-05018	SCREW, with washer	4	
4	4F4-24810-00	CARRIER ASSY	1	
5	97301-08016	BOLT	4	
6	92901-08100	WASHER, sPring	4	
7	92901-08600	WASHER, Plate	4	
8	3L6-23391-00	PANEL, front	1	mellow white

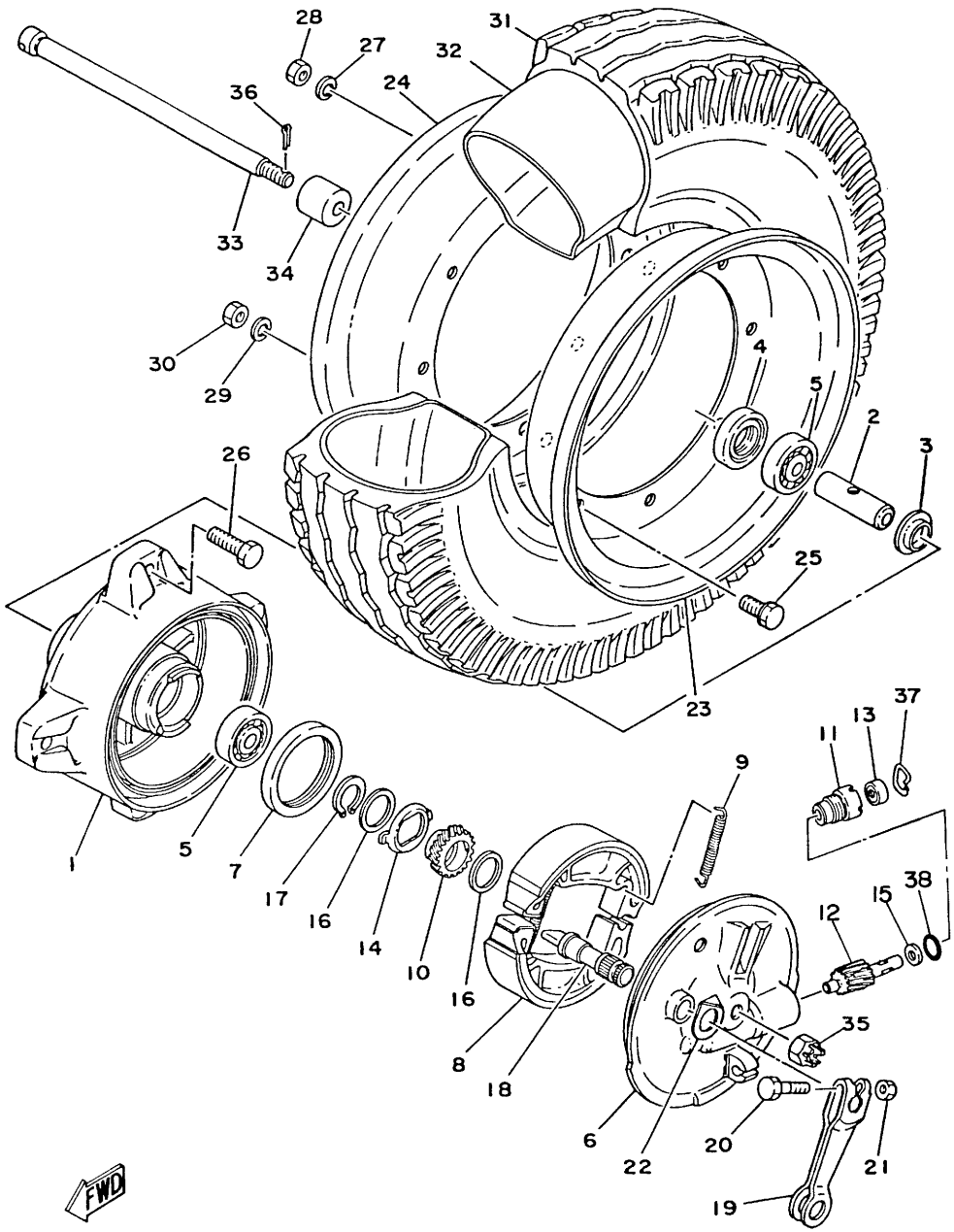

FIG. 24 FRONT WHEEL

REF. NO.	PART NO.	DESCRIPTION	Q'TY	REMARKS
1	439-25111-01	HUB, front	1	
2	90560-10104	SPACER	1	
3	195-25115-00	FLANGE, sPacer 1	1	
4	93106-20001	OIL SEAL	1	
5	93306-30003	BEARING (B6300Z)	2	
6	3T5-25121-00-35	PLATE, brake shoe	1	silver
7	93105-47007	OIL SEAL	1	
8	296-25330-00	BRAKE SHOE COMP.	2	
9	90506-16150	SPRING, tension	2	
10	439-25135-00	GEAR, drive	1	
11	109-25136-00	BUSH	1	
12	439-25138-00	GEAR, meter	1	
13	93104-07003	OIL SEAL	1	
14	183-25149-00	CLUTCH, meter	1	
15	90201-07076	WASHER, Plate	1	
16	90201-20269	WASHER, Plate	2	
17	93410-20009	CIRCLIP	1	
18	538-25351-01	CAMSHAFT	1	
19	3E1-25155-00	LEVER, camshaft 1	1	
20	90101-06278	BOLT	1	
21	95301-06600	NUT	1	
22	3E1-2513A-00	PLATE, indicator	1	
23	1L4-25337-00-35	PANEL, wheel 1	1	silver
24	1L4-25347-00-35	PANEL, wheel 2	1	silver
25	90119-08023	BOLT, with washer	4	
26	90101-08249	BOLT	4	
27	92901-08100	WASHER, sPring	4	
28	95301-08600	NUT	4	

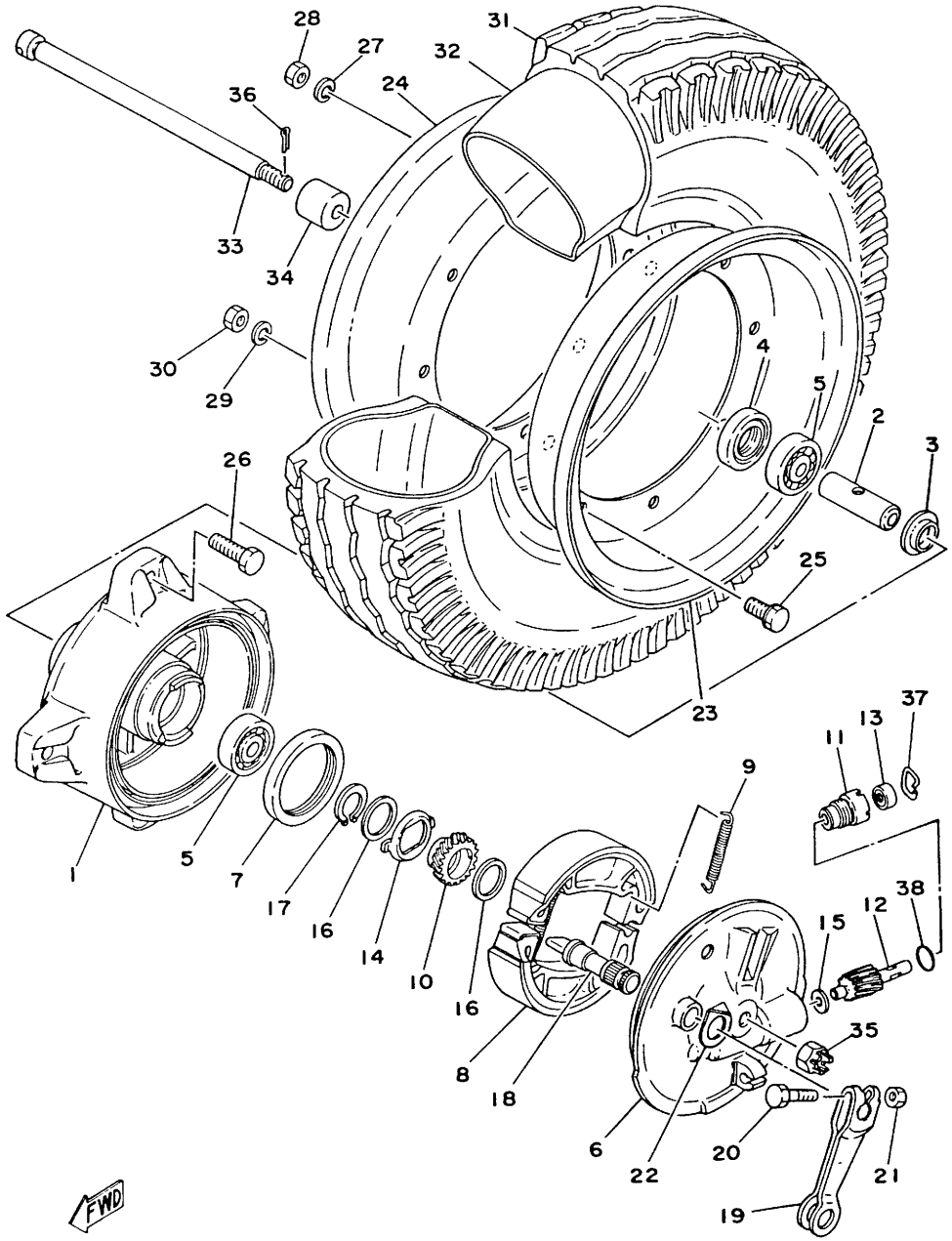

FIG. 24 FRONT WHEEL

REF. NO.	PART NO.	DESCRIPTION	Q'TY	REMARKS
29	92901-08100	WASHER, spring	4	
30	95301-08600	NUT	4	
31	94140-08237	TIRE (4.00-08)	1	
32	94240-08044	TUBE (4.00-08)	1	
33	439-25181-01	AXLE, wheel	1	
34	90387-10081	COLLAR	1	
35	90171-10004	NUT, castle	1	
36	91401-20020	PIN, cotter	1	
37	102-25137-00	RING, stop	1	
38	93210-14104	O-RING	1	

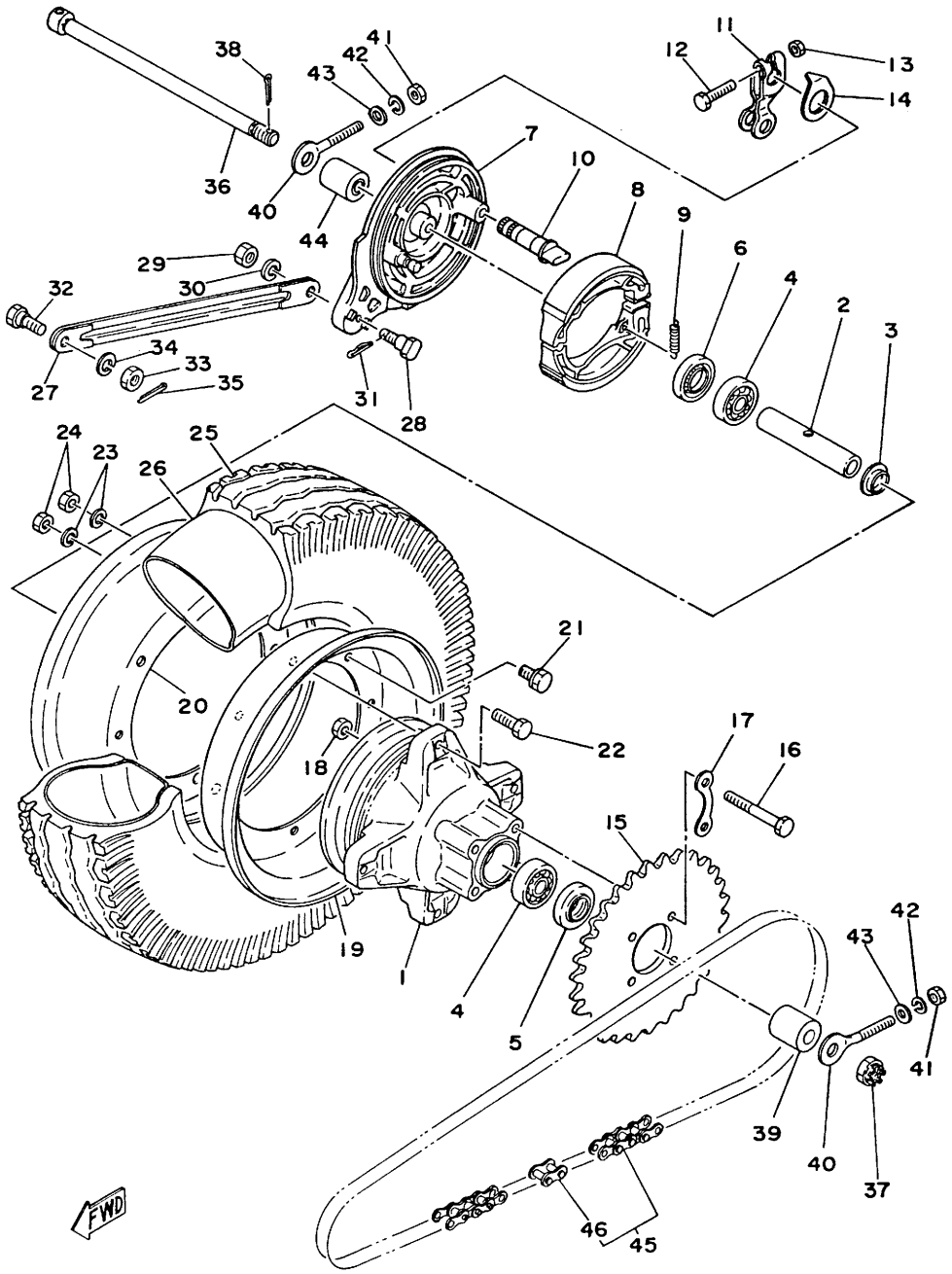

FIG. 25 REAR WHEEL

REF. NO.	PART NO.	DESCRIPTION	Q'TY	REMARKS
1	439-25311-00	HUB, rear	1	
2	90560-12110	SPACER	1	
3	109-25315-00	FLANGE, spacer	1	
4	93306-30103	BEARING (B6301Z)	2	
5	93106-20002	OIL SEAL	1	
6	93104-21016	OIL SEAL	1	
7	3E1-25321-00-35	PLATE, brake shoe	1	silver
8	296-25330-00	BRAKE SHOE COMP.	2	
9	90506-16150	SPRING, tension	2	
10	538-25351-01	CAMSHAFT	1	
11	1M3-25355-01	LEVER, camshaft	1	
12	90101-06278	BOLT	1	
13	95301-06600	NUT	1	
14	3E1-2513A-00	PLATE, indicator	1	
15	109-25428-20-33	SPROCKET, driven (28T)	1	yamaha black
16	90109-08319	BOLT	4	
17	101-25412-00	WASHER	2	
18	90170-08158	NUT	4	
19	1L4-25337-00-35	PANEL, wheel 1	1	silver
20	1L4-25347-00-35	PANEL, wheel 2	1	silver
21	90119-08023	BOLT, with washer	4	
22	90101-08249	BOLT	4	
23	92901-08100	WASHER, spring	8	
24	95301-08600	NUT	8	
25	94140-08237	TIRE (4.00-08)	1	
26	94240-08044	TUBE (4.00-08)	1	
27	561-25371-00	BAR, tension	1	
28	90109-08183	BOLT	1	

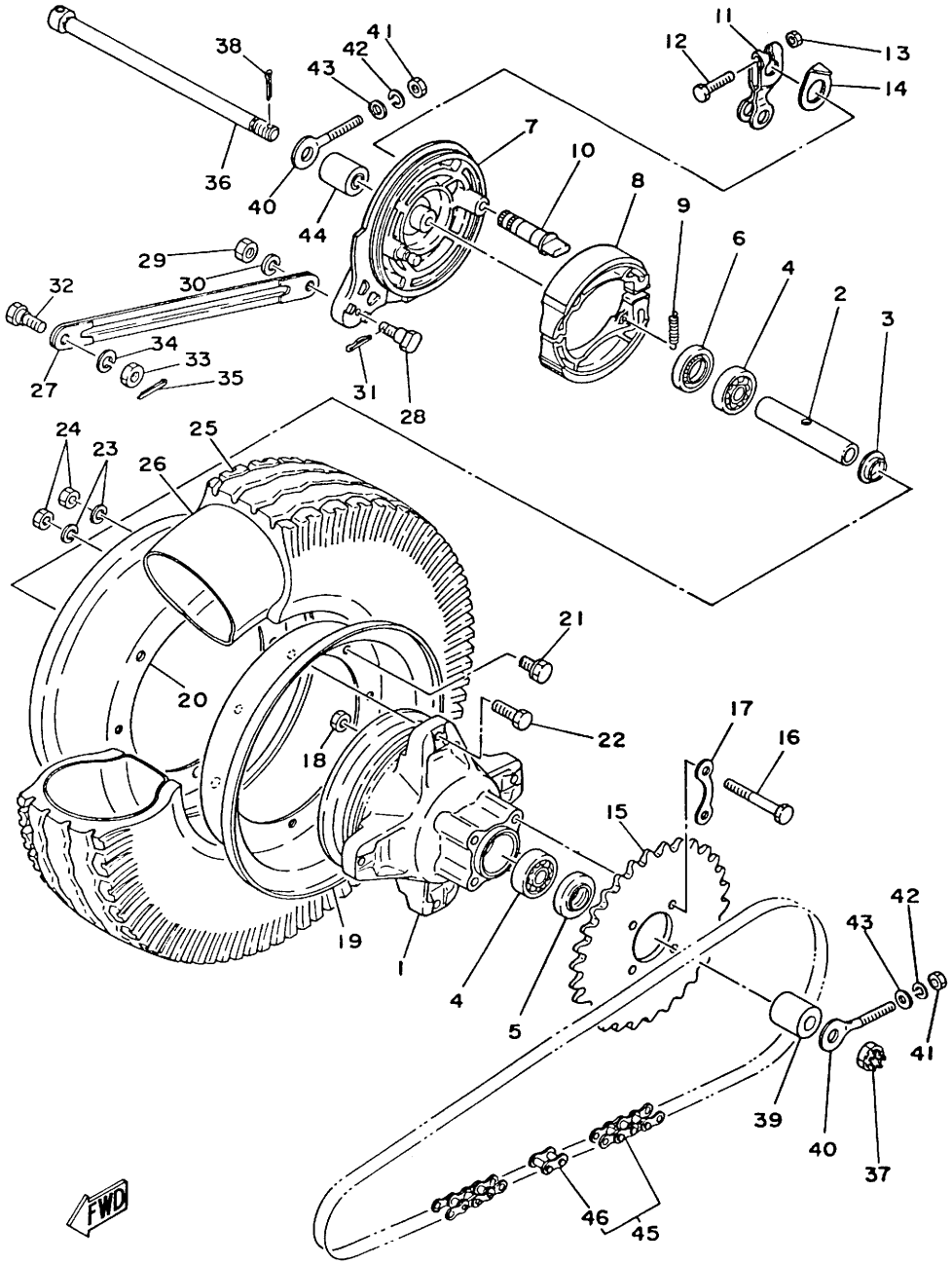

FIG. 25 REAR WHEEL

REF. NO.	PART NO.	DESCRIPTION	Q'TY	REMARKS
29	95301-08700	NUT	1	
30	92901-08100	WASHER, spring	1	
31	90468-12007	CLIP	1	
32	90109-08368	BOLT	1	
33	95301-08700	NUT	1	
34	92901-08100	WASHER, spring	1	
35	91401-20015	PIN, cotter	1	
36	439-25381-01	AXLE, wheel	1	
37	90171-12005	NUT, castle	1	
38	91401-30025	PIN, cotter	1	
39	90387-12096	COLLAR	1	
40	102-25389-00	PULLER, chain 2	2	
41	95301-06600	NUT	2	
42	92901-06100	WASHER, spring	2	
43	92901-06600	WASHER, plate	2	
44	90387-12412	COLLAR	1	
45	94580-13088	CHAIN, drive (DID420M 88L)	1	
46	94604-20001	•JOINT, chain	1	

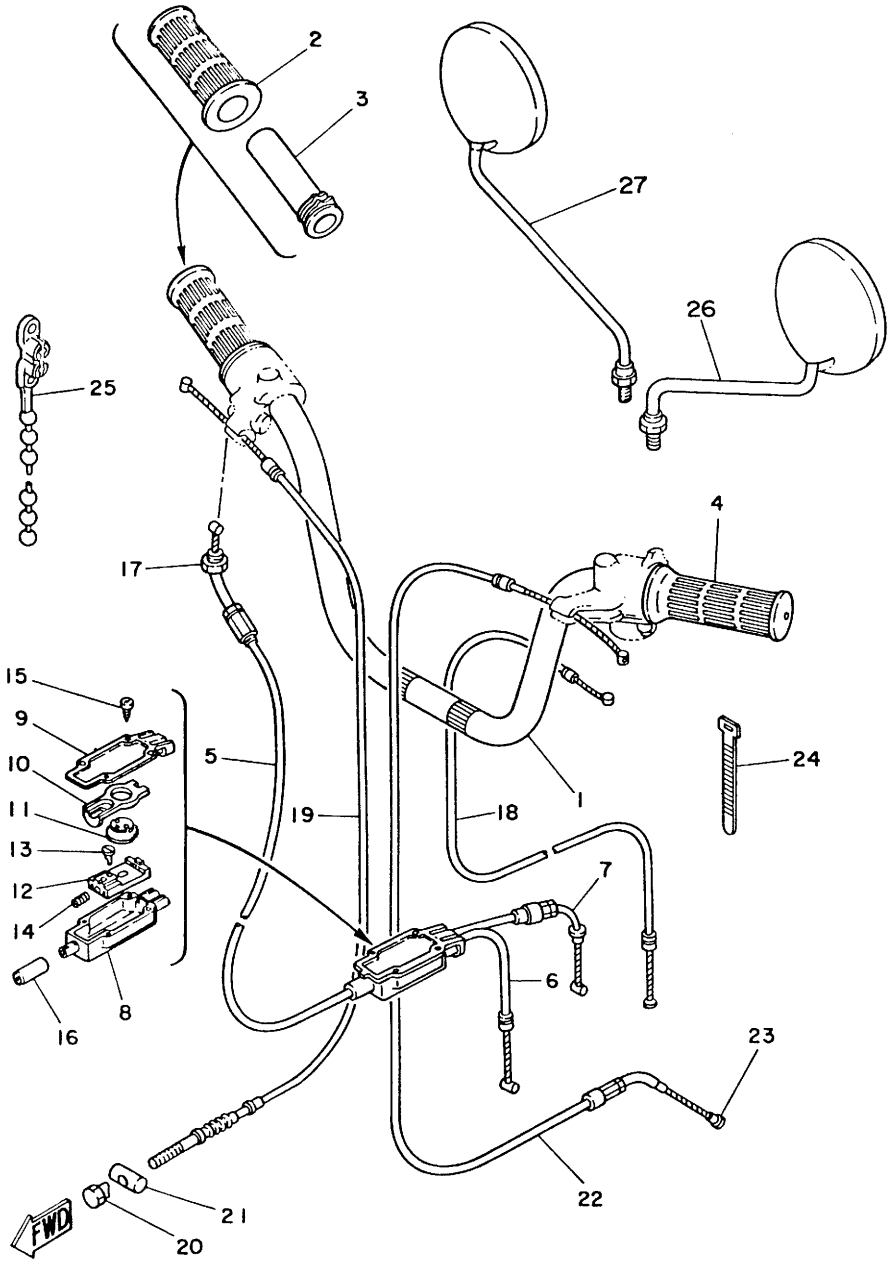

FIG. 26 HANDLEBAR.CABLE

REF. NO.	PART NO.	DESCRIPTION	Q'TY	REMARKS
1	2T5-26111-00	HANDLEBAR	1	
2	395-26242-00	GRIP (R.H)	1	
3	395-26243-00	TUBE, throttle guide	1	
4	395-26241-00	GRIP (L.H)	1	
5	2T5-26311-00	CABLE, throttle 1	1	
6	2T5-26312-00	CABLE, throttle 2	1	
7	2T5-26321-00	CABLE, pump	1	
8	2T5-26261-00	CONNECTOR, cable	1	
9	2T5-26262-00	CAP, cable connector	1	
10	2T5-26274-00	GUIDE, rotor	1	
11	2T5-26273-00	ROTOR	1	
12	2T5-26244-00	SLIDER, throttle	1	
13	2T5-26267-00	PIN	1	
14	90501-05512	SPRING, compression	1	
15	90167-03004	SCREW, tapping	2	
16	156-26329-00	CAP, rubber	1	
17	90170-10038	NUT	1	
18	439-26331-00	CABLE, starter 1	1	
19	4F4-26341-00	CABLE, brake	1	
20	90179-06176	NUT	1	
21	90249-12008	PIN	1	
22	4F5-26335-00	CABLE, clutch	1	
23	164-26363-00	END, cable	1	
24	803-82591-00	BAND	1	
25	90464-20031	CLAMP	1	
26	1Y0-26290-10	MIRROR ASSY (L.H)	1	
27	1Y0-26290-00	MIRROR ASSY (R.H)	1	

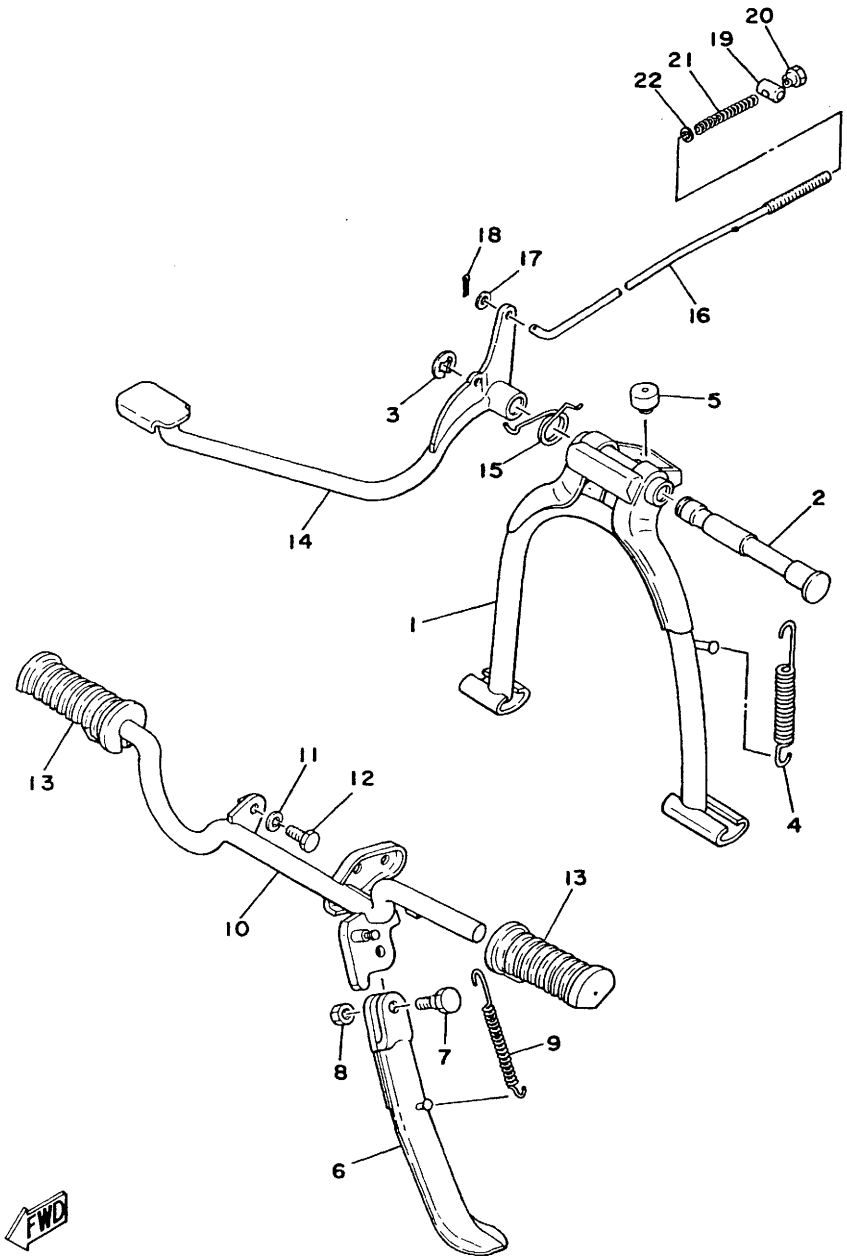

FIG. 27 STAND.FOOTREST

REF. NO.	PART NO.	DESCRIPTION	Q'TY	REMARKS
1	439-27111-03-33	STAND, main	1	yamaha black
2	336-27112-00	SHAFT, main stand	1	
3	93430-12008	CIRCLIP	1	
4	90506-26270	SPRING, tension	1	
5	1M3-27114-00	STOPPER, main stand	1	
6	395-27311-01	STAND, side	1	
7	90109-08032	BOLT	1	
8	95301-08700	NUT	1	
9	90506-25047	SPRING, tension	1	
10	439-27411-00	FOOTREST 1	1	
11	92901-08100	WASHER, spring	1	
12	90101-08287	BOLT	1	
13	441-27413-01	COVER, footrest	2	
14	563-27211-03-91	PEDAL, brake	1	uni chrome
15	90508-32056	SPRING, torsion	1	
16	288-27231-00	ROD, brake	1	
17	92901-06600	WASHER, Plate	1	
18	91401-20015	PIN, cotter	1	
19	90249-12008	PIN	1	
20	90179-06176	NUT	1	
21	90501-10245	SPRING, compression	1	
22	92901-06600	WASHER, Plate	1	

D6

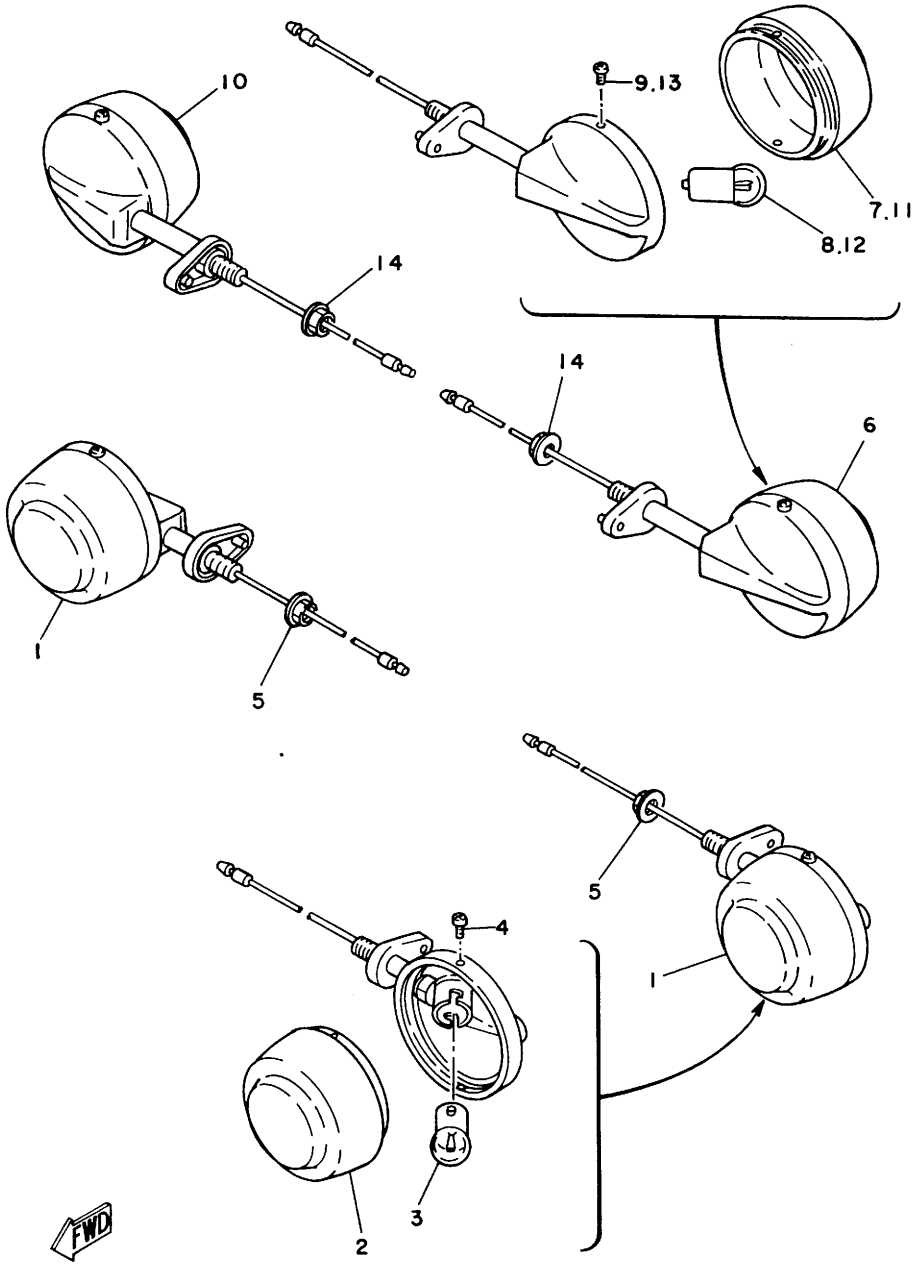

FIG. 28 FLASHER LIGHT

REF. NO.	PART NO.	DESCRIPTION	Q'TY	REMARKS
1	4F4-83310-N0-93	FRONT FLASHER LIGHT ASSY 1	2	chrome-Plated
2	4F4-83312-N0	•LENS, flasher	1	
3	152-83311-10	•BULB (6V-10W)	1	
4	98501-03008	•SCREW, Pan head	2	
5	95701-08100	NUT, flange	2	
6	4F4-83330-N0-93	REAR FLASHER LIGHT ASSY 1	1	chrome-Plated
7	4F4-83312-N0	•LENS, flasher	1	
8	152-83311-10	•BULB (6V-10W)	1	
9	98501-03008	•SCREW, Pan head	2	
10	4F4-83340-N0-93	REAR FLASHER LIGHT ASSY	1	chrome-Plated
11	4F4-83312-N0	•LENS, flasher	1	
12	152-83311-10	•BULB (6V-10W)	1	
13	98501-03008	•SCREW, Pan head	2	
14	95701-08100	NUT, flange	2	

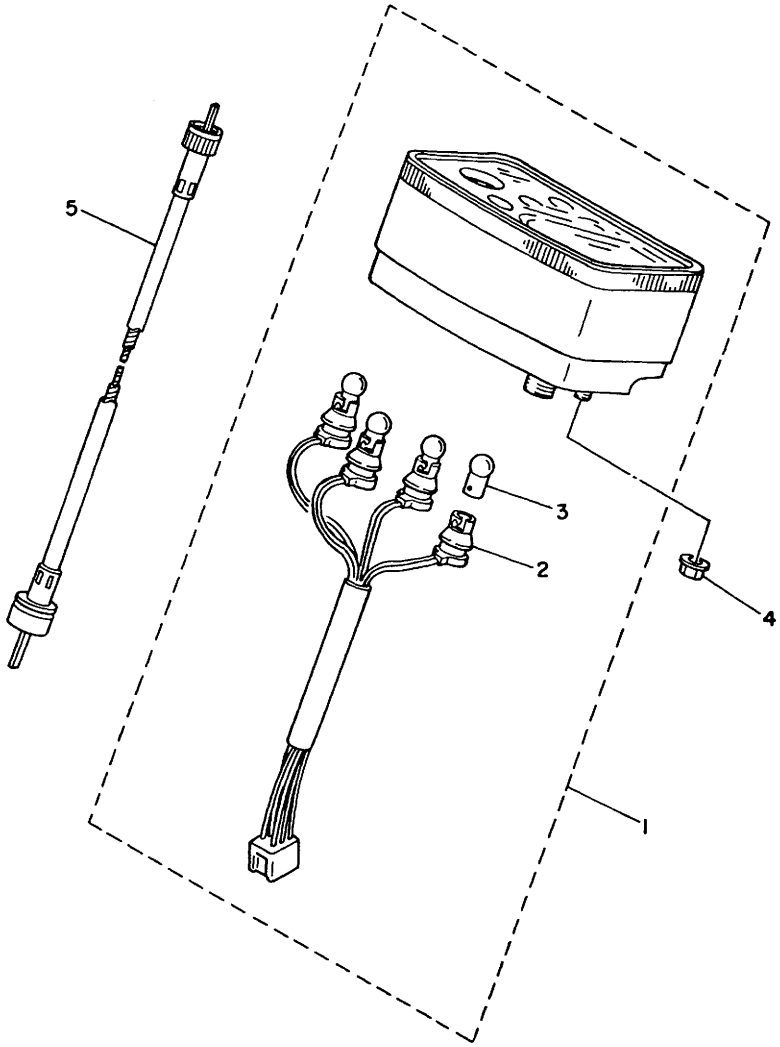

FIG. 29 METER

REF. NO.	PART NO.	DESCRIPTION	Q'TY	REMARKS
1	5R4-83510-F0	SPEEDOMETER ASSY	1	
2	5R4-83536-F0	•SOCKET, meter	1	
3	122-83516-10	•BULB (6V-3W)	4	
4	95701-05100	NUT, flange	2	
5	4F4-83550-00	SPEEDOMETER CABLE ASSY	1	UR
	4F4-83550-10	SPEEDOMETER CABLE ASSY	1	UR

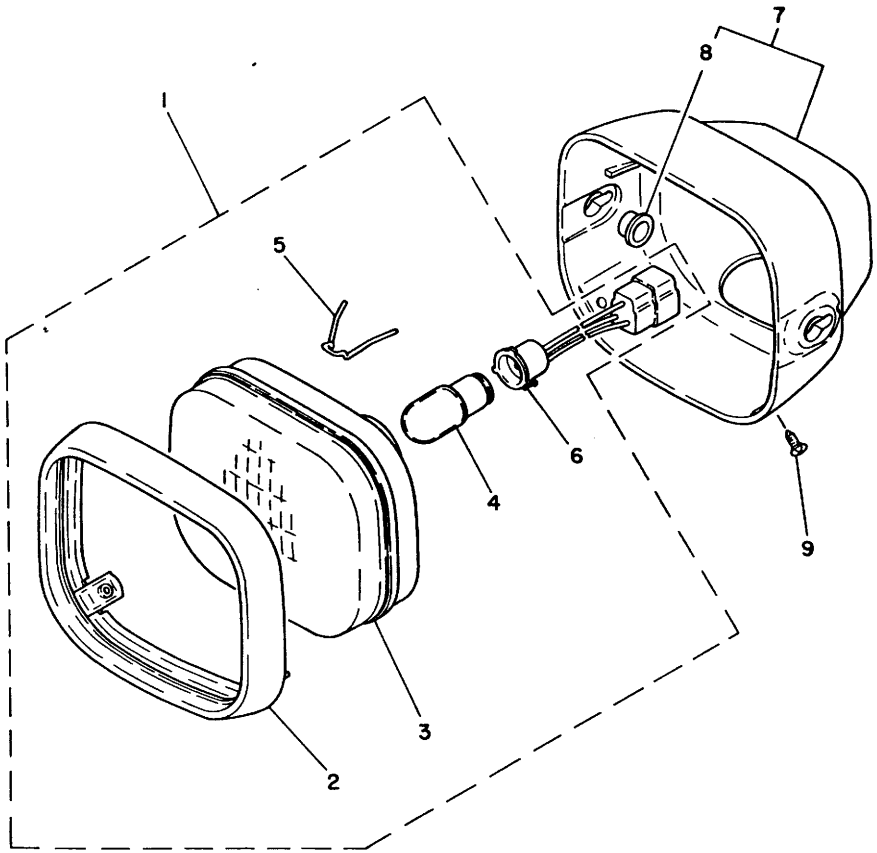

FIG. 30 HEADLIGHT

REF. NO.	PART NO.	DESCRIPTION	Q'TY	REMARKS
1	4F4-84110-00	HEADLIGHT UNIT ASSY	1	
2	4F4-84115-00	•RIM, headlight	1	
3	3L6-84120-00	•LENS ASSY	1	
4	206-84114-60	•BULB (6V-25/25W)	1	
5	3L6-84124-00	•SPRING, set	4	
6	3L6-84140-00	•SOCKET CORD ASSY	1	
7	4F4-84130-00-E1	BODY ASSY, headlight	1	UR chappy red
	4F4-84130-00-L3	BODY ASSY, headlight	1	UR competition light green
	4F4-84130-00-1A	BODY ASSY, headlight	1	UR new white
	4F4-84130-00-26	BODY ASSY, headlight	1	UR competition yellow
	4F4-84130-00-29	BODY ASSY, headlight	1	UR candy blue
8	3L6-84145-00	•COLLAR, body fitting	2	
9	3L6-84137-00	BOLT, special	2	

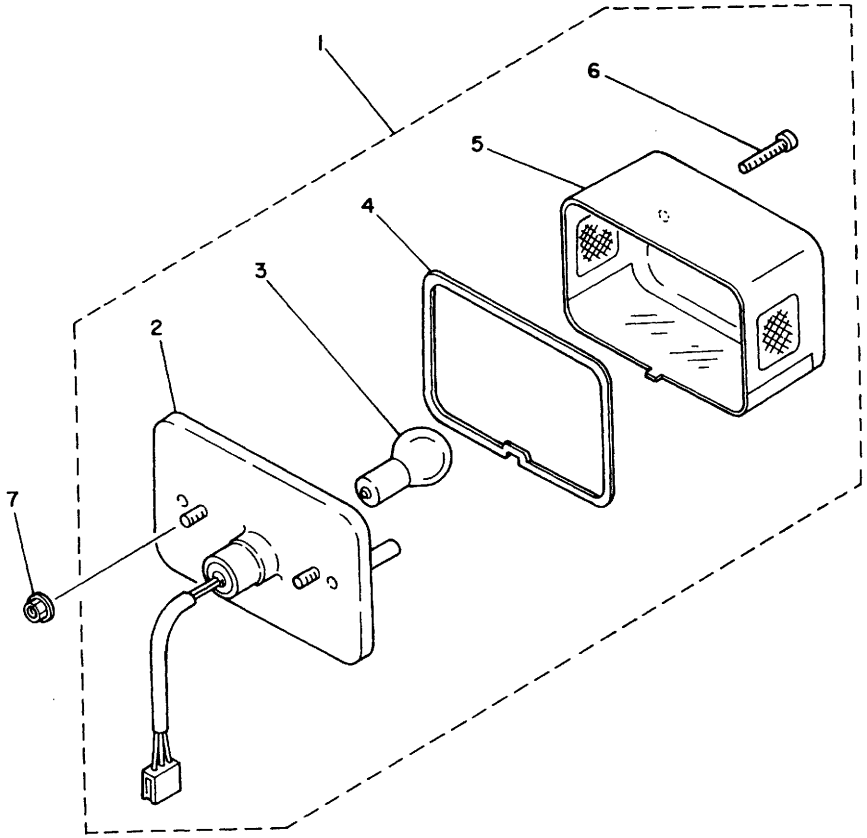

FIG. 31 TAILLIGHT

REF. NO.	PART NO.	DESCRIPTION	Q'TY	REMARKS
1	4F4-84510-00	TAILLIGHT UNIT ASSY	1	
2	4F4-84520-00	•TAILLIGHT BASE ASSY	1	
3	122-84514-30	•BULB (6V-17/5.3W)	1	
4	1K8-84523-00	•GASKET, lens	1	
5	1K8-84521-00	•LENS, taillight	1	
6	2E9-84524-00	•SCREW, lens fitting	2	
7	95701-06100	NUT, flange	2	

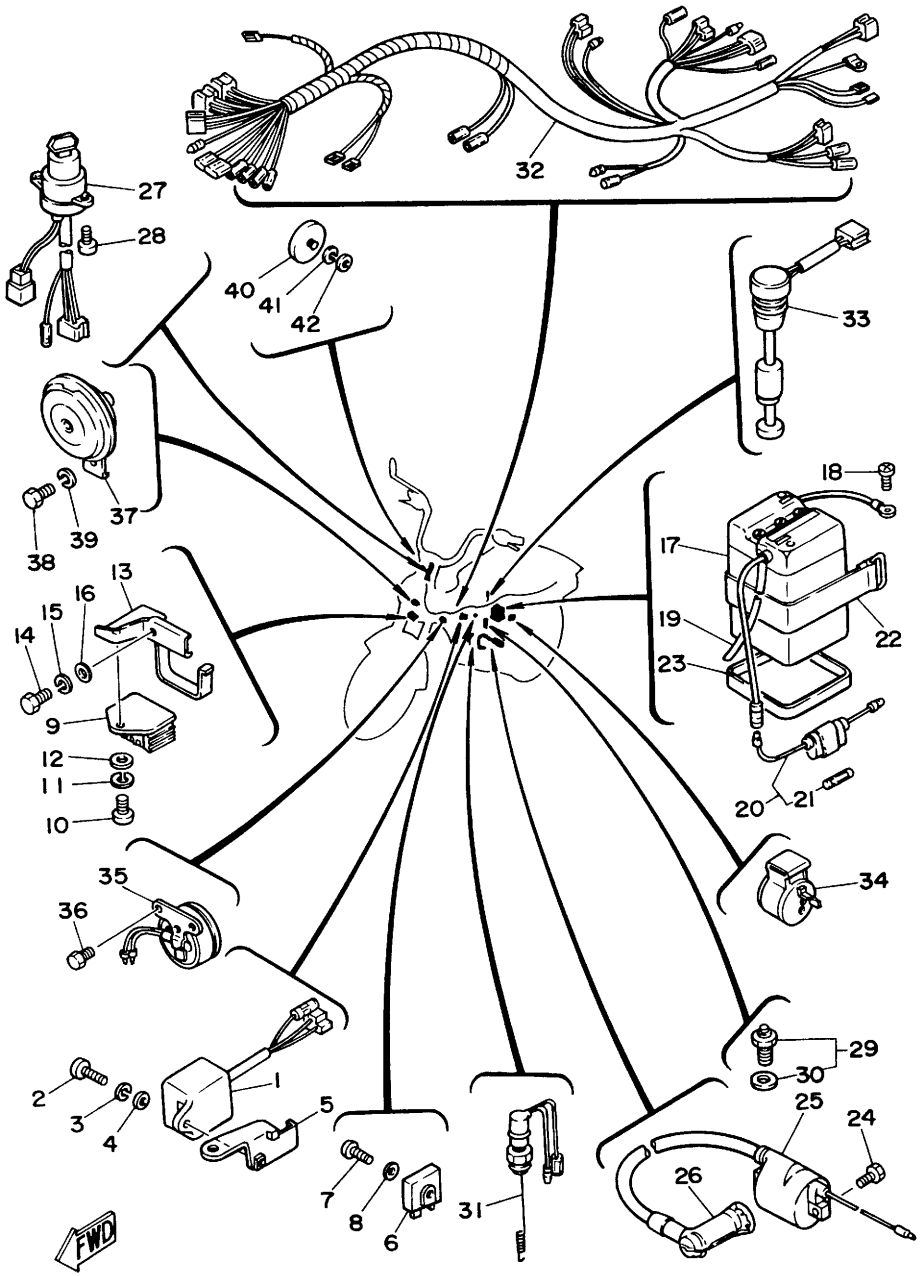

FIG. 32 ELECTRICAL 1

REF. NO.	PART NO.	DESCRIPTION	Q'TY	REMARKS
1	2E9-85540-M0	C.D.I. UNIT ASSY	1	
2	92501-06020	SCREW, Pan head	1	
3	92901-06100	WASHER, sPring	1	
4	92901-06600	WASHER, Plate	1	
5	4F4-85542-00	BRACKET	1	
6	353-81970-50	RECTIFIER ASSY	1	UR
	353-81970-63	RECTIFIER ASSY	1	UR
7	98501-05020	SCREW, Pan head	1	
8	92901-05600	WASHER, Plate	1	
9	4F4-81910-60	VOLTAGE REGULATOR ASSY	1	
10	92501-06015	SCREW, Pan head	1	
11	92901-06100	WASHER, sPring	1	
12	92901-06600	WASHER, Plate	1	
13	4F4-81915-00	PLATE, regulator fitting	1	
14	97301-06012	BOLT	1	
15	92901-06100	WASHER, sPring	1	
16	92901-06600	WASHER, Plate	1	
17	120-82110-29	BATTERY ASSY (6N4-2A-2)	1	
18	92501-06010	SCREW, Pan head	1	
19	90445-08247	HOSE	1	
20	353-82150-00	FUSE HOLDER ASSY	1	
21	116-82151-00	•FUSE (6V-10A)	1	
22	122-82131-00	BAND, battery	1	
23	268-82122-00	SEAT, battery	1	
24	97301-06016	BOLT	2	
25	4F4-82310-M0	IGNITION COIL ASSY	1	
26	512-82370-10	PLUG CAP ASSY	1	UR with noise suP-Presser
	117-82370-20	PLUG CAP ASSY	1	UR
27	4F4-82508-00	MAIN SWITCH ASSY	1	

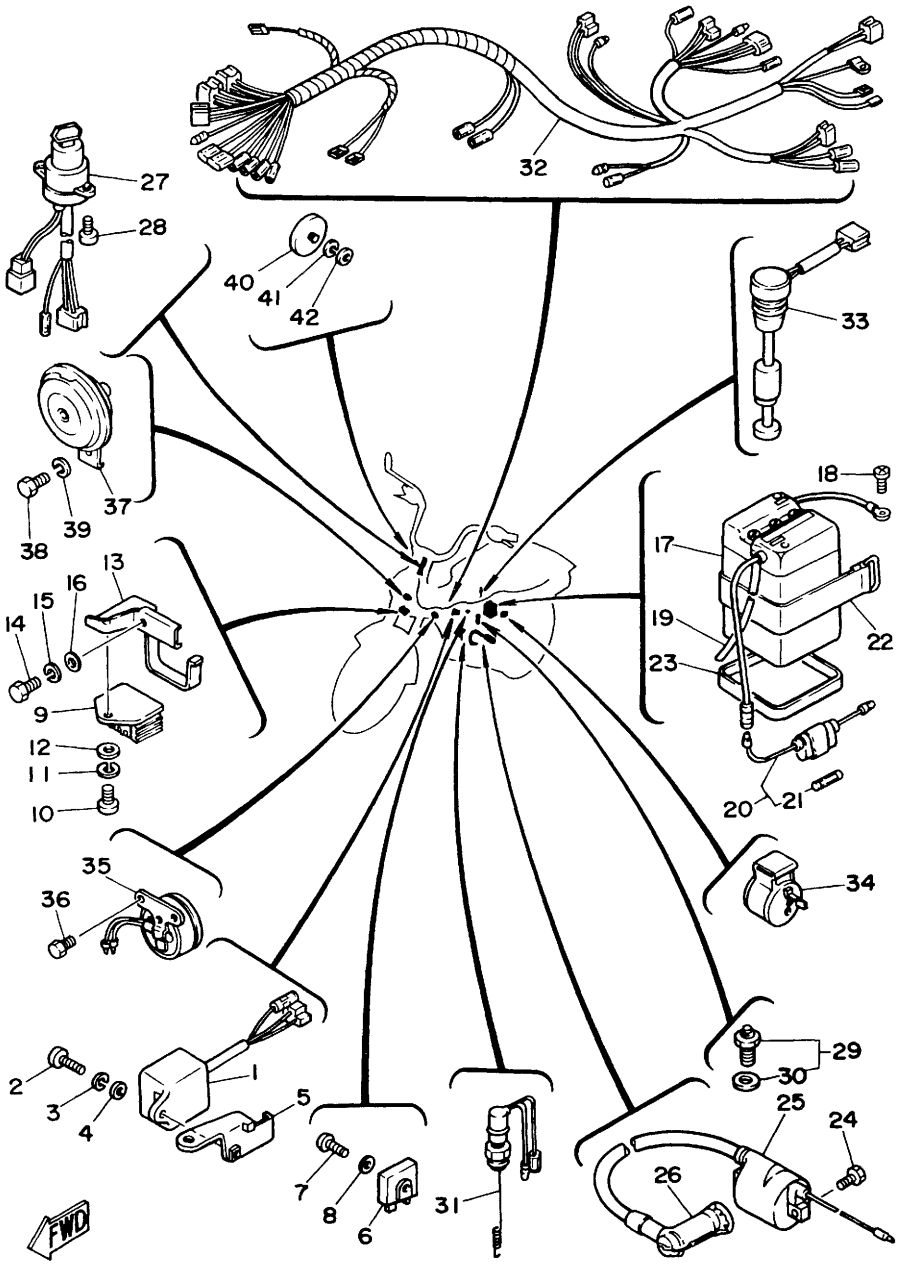

FIG. 32 ELECTRICAL 1

REF. NO.	PART NO.	DESCRIPTION	Q'TY	REMARKS
28	98901-04016	SCREW, bind	2	
29	341-82540-01	NEUTRAL SWITCH ASSY	1	
30	341-82543-00	•GASKET	1	
31	1J7-82530-00	STOP SWITCH ASSY	1	
32	4F5-82590-22	WIRE HARNESS ASSY	1	
33	2T5-85720-00	OIL LEVEL GAUGE ASSY	1	
34	3E1-83350-11	FLASHER RELAY ASSY	1	
35	561-83390-20	AUDIO PILOT ASSY	1	
36	97301-06016	BOLT	2	
37	4F4-83371-10	HORN	1	
38	97301-06012	BOLT	1	
39	92901-06100	WASHER, spring	1	
40	2N8-85111-00	REFLECTOR, front 1	2	
41	92901-05100	WASHER, spring	2	
42	92901-05200	WASHER, Plain	2	

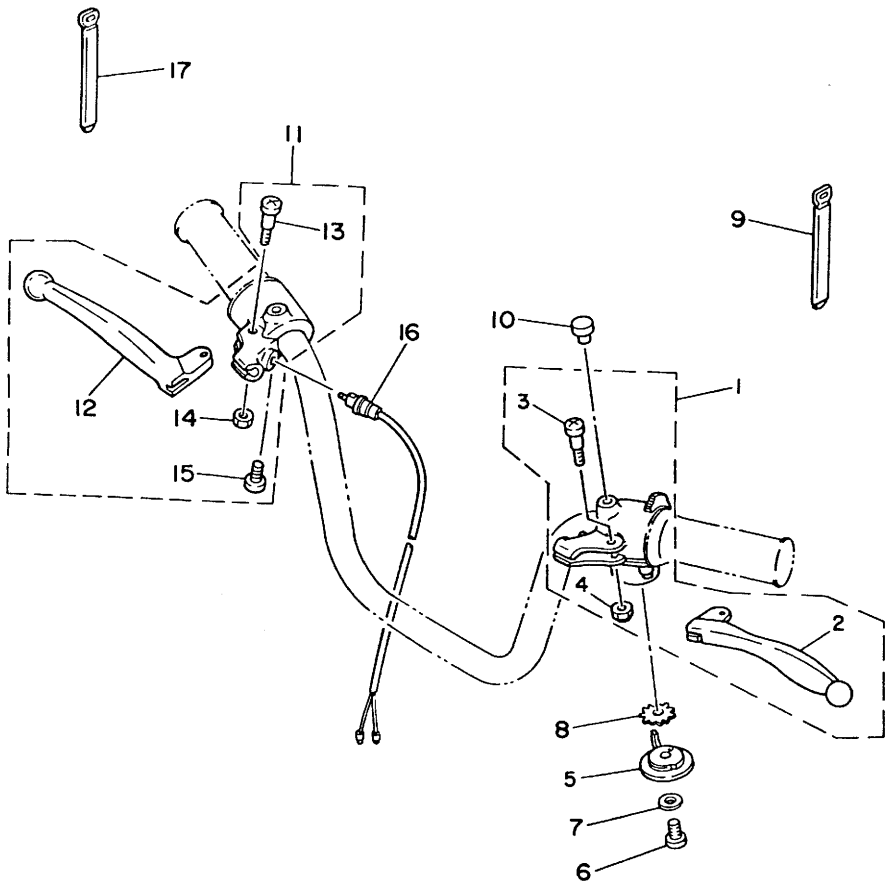

FIG. 33 HANDLE SWITCH.LEVER

REF. NO.	PART NO.	DESCRIPTION	Q'TY	REMARKS
1	4F5-W8271-00	LEVER HOLDER ASSY	1	
2	425-83912-01	.LEVER 1	1	
3	90149-05120	.SCREW	1	
4	95601-05100	.NUT, u	1	
5	439-83941-02	LEVER, starter	1	
6	92501-06008	SCREW, Pan head	1	
7	92901-06200	WASHER, Plain	1	
8	90209-10131	WASHER	1	
9	168-83936-01	BAND, switch cord	1	
10	90338-07011	PLUG	1	
11	5R4-W8292-00	LEVER HOLDER ASSY (R.H)	1	
12	395-83922-02	.LEVER 2	1	
13	90149-05121	.SCREW	1	
14	95601-05100	.NUT, u	1	
15	98501-05025	.SCREW, Pan head	2	
16	361-83980-30	FRONT STOP SWITCH ASSY	1	
17	168-83936-01	BAND, switch cord	1	

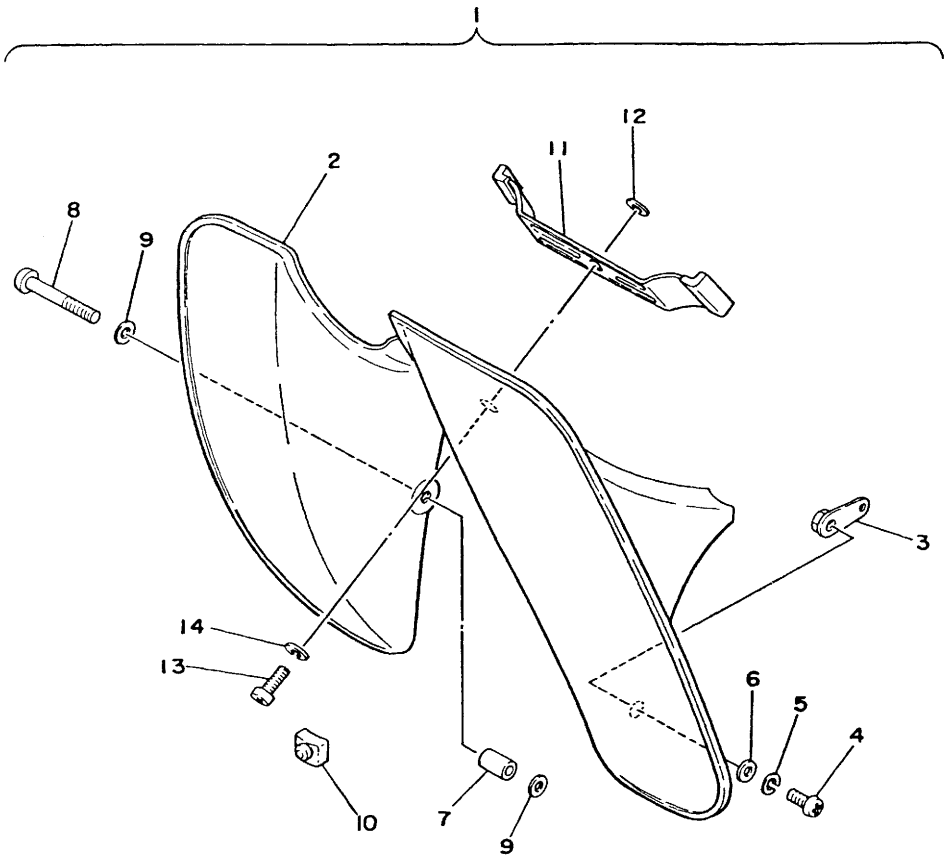

FIG. 34 LEG SHIELD

REF. NO.	PART NO.	DESCRIPTION	Q'TY	REMARKS
1	1L4-W0030-00	LEG SHIELD SET	1	
2	1L4-28311-00	•LEG SHIELD 1	1	
3	1L4-28356-00	•STAY 1	1	
4	92501-06012	•SCREW, Pan head	1	
5	92901-06100	•WASHER, sPring	1	
6	90201-06062	•WASHER, Plate	1	
7	90387-06461	•COLLAR	1	
8	92501-06050	•SCREW, Pan head	1	
9	90201-06062	•WASHER, Plate	2	
10	439-28371-00	•DAMPER	2	
11	439-28335-02	•PLATE	1	
12	90201-06062	•WASHER, Plate	1	
13	92501-06020	•SCREW, Pan head	1	
14	92901-06100	•WASHER, sPring	1	

REPAIR KIT

FIG. 35 REPAIR KIT

Ref.No.	Part No.	Description	Q'ty	Remarks
1	367-11630-51	PISTON ASSY (STD)	1	
2	367-11630-11-96	. PISTON (STD)	1	
3	367-11610-00	. PISTON RING SET (STD)	1	
4	527-11633-00	. PIN, piston	1	
5	93450-13022	. CIRCLIP	2	
6	367-11630-61	PISTON ASSY	1	
7	367-11635-11	. PISTON (1st O/S 0.25mm)	1	
8	367-11610-10	. PISTON RING SET (1st O/S)	1	
9	527-11633-00	. PIN, piston	1	
10	93450-13022	. CIRCLIP	2	
11	367-11630-71	PISTON ASSY	1	
12	367-11636-11	. PISTON (2nd O/S 0.5mm)	1	
13	367-11610-20	. PISTON RING SET (2nd O/S)	1	
14	527-11633-00	. PIN, piston	1	
15	93450-13022	. CIRCLIP	2	
16	538-11650-00	CONNECTING ROD ASSY	1	
17	538-11651-01	. ROD, connecting	1	
18	257-11681-00	. PIN, crank 1	1	
19	93310-41809	. BEARING	1	
20	93310-11268	. BEARING	1	

INDEX

PART NO.	GRID NO.
1L4-W0030-00	D14
562-W2472-02	C13
4F5-W8271-00	D13
5R4-W8292-00	D13
527-11111-00-94	B 2
1T9-11161-00	B 2
1F5-11162-00	B 2
1F5-11181-00	B 2
4F7-11311-00	B 2
440-11351-00	B 2
527-11400-02	B 3
527-11412-03	B 3
527-11422-01	B 3
367-11610-00	B 3
	D15
367-11610-10	B 3
	D15
367-11610-20	B 3
	D15
367-11630-11-96	D15
367-11630-51	D15
367-11630-61	D15
367-11630-71	D15
367-11631-11-96	B 3
367-11631-11-98	B 3
527-11633-00	B 3
	D15
367-11635-11	B 3
	D15
367-11636-11	B 3
	D15
538-11650-01	D15
538-11651-01	B 3
	D15
257-11681-00	B 3
	D15
2T8-13101-00	B 5
2T5-13124-00	B 5
384-13138-00	B 5
296-13147-00	B 5
384-13174-00	B 5
2T6-13178-00	B 5
1L4-13565-00	B 6
2T5-13610-00	B 6
2T5-13613-00	B 6
314-13616-01	B 6
1F5-13621-01	B 6
1F5-13622-01	B 6
2T5-13624-00	B 6
4F7-14101-00	B 7
1F5-14112-25	B 8
353-14116-02	B 7
102-14122-00	B 7
127-14123-00	B 8
432-14124-00	B 7
127-14125-01	B 8
1V3-14126-00	B 8
127-14131-00	B 7
127-14134-00	B 7
127-14135-00	B 8
296-14136-00	B 7
127-14137-00	B 7
127-14141-18	B 7
193-14142-17	B 7
127-14143-18	B 7
127-14143-19	B 7
127-14143-20	B 7
2T8-14155-00	B 7
439-14155-00	B 8
1V3-14158-00	B 8
127-14161-00	B 7
296-14164-00	B 8
1M1-14169-00	B 7
1R0-14169-00	B 7
439-14169-00	B 8
127-14171-00	B 8
439-14174-01	B 8
2T5-14181-05	B 7
127-14184-00	B 7
2E9-14185-00	B 7
127-14186-00	B 7
517-14190-12	B 7
127-14195-00	B 7
1M2-14196-00	B 7
509-14198-00	B 7
1V8-14411-00	B 6
1V8-14412-00	B 6
1V8-14451-00	B 6
1V8-14453-00	B 6
439-14611-03	B 9
1L4-14612-00	B 9
132-14613-00	B 9
4F4-14710-00	B 9
395-14713-00	B 9
3T5-14714-00	B 9
4F4-14718-00	B 9
4F4-14727-00	B 9
4F4-14728-00	B 9
4F4-14729-00	B 9
4F4-14737-00	B 9
4F4-14739-00	B 9
441-14747-00	B 9
4F4-14753-00-98	B 9
341-14952-00	B 7
442-15111-03	B10
442-15121-04	B10
296-15128-00	B10
530-15317-00	B10
137-15353-00	B 9
441-15361-01	C 5
353-15362-00	B11
257-15389-00	B13
1M3-15411-00	B11
164-15415-00	B11
439-15416-02	B10
257-15417-01	B11
441-15421-00	B11
439-15426-03	B10
296-15451-01	B11
122-15612-02	B12
156-15618-01	B12
439-15620-04	B12
1W7-15641-00	B12
1L5-15660-01	B12
3E5-15664-00	B12
3E5-15676-00	B12
1W7-15687-01	B12
401-16111-00-20	B13
401-16111-00-30	B13
401-16111-00-40	B13
1L5-16150-00-20	B13
1L5-16150-00-30	B13
1L5-16150-00-40	B13
122-16164-00	B13
1L5-16301-00	B13
131-16321-00	B13
257-16324-00	B13
241-16341-01	B13
451-16342-00	B13
132-16346-00	B14
	C 2
353-16351-00	B13
137-16356-00	B13
353-16357-00	B13
131-16367-00	B13
353-16371-00	B13
353-16396-00	B14
353-17121-11	B15
353-17131-00	B15
353-17141-12	B15
1L5-17211-02	B15
441-17231-00	B15
353-17241-00	B15
441-17411-01	B15
1L5-17420-01	B15
257-17461-31	B15
257-17461-41	B15
257-17461-51	B15
296-17471-00	B15

NUMERICAL INDEX

PART NO.	GRID NO.
3E1-18101-00	C 3
441-18111-01-91	C 3
132-18113-01	C 3
441-18140-00	C 2
425-18511-00	C 2
353-18512-01	C 2
441-18531-02	C 2
2T6-18540-00	C 2
136-18542-00	C 2
296-18561-00	C 2
296-18562-01	C 2
4F4-21110-00-33	C 4
439-21421-00-33	C 4
441-21510-00-93	C 6
441-21611-00-93	C 6
439-21629-00	C 4
4F4-21751-01	C 7
3L5-21770-01	C 7
439-21778-01	C 7
4F4-21783-00	C 4
4F4-21783-10	C 4
4F4-21783-20	C 4
1L7-22110-00-33	C 8
102-22123-00	C 8
353-22141-02	C 8
395-22151-00	C 8
561-22210-22	C 8
1L4-22311-00	C 8
4F4-23101-00	C10
395-23111-00	C10
122-23112-00	C10
307-23114-00	C10
354-23115-90	C10
4F4-23121-00-E1	C10
4F4-23121-00-L3	C10
4F4-23121-00-1A	C10
4F4-23121-00-26	C10
4F4-23121-00-29	C10
4F4-23124-00	C10
367-23125-60	C10
4F4-23126-00-35	C10
4F4-23131-00-E1	C10
4F4-23131-00-L3	C10
4F4-23131-00-1A	C11
4F4-23131-00-26	C11
4F4-23131-00-29	C11
4F4-23134-00	C10
4F4-23136-00-35	C10
2T5-23141-00	C10
367-23144-60	C10
367-23145-60	C10
367-23146-60	C10
290-23149-00	C10
1T8-23156-00	C10
122-23163-00	C10
2T5-23166-00	C10
260-23318-40	C10
2T5-23340-00-33	C10
1M3-23346-00	C10
3L6-23391-00	C14
4F4-23408-00	C 9
122-23411-00	C 9
156-23411-00	C 9
122-23412-00	C 9
156-23412-00	C 9
122-23416-00	C 9
439-23435-02-35	C 9
122-23441-00	C 9
122-23442-02	C 9
4F4-24111-00	C12
561-24173-00	C12
4F4-24181-00	C12
439-24182-00	C12
4F4-24260-01	C12
4J2-24261-00	C12
439-24311-00	C12
439-24317-00	C12
439-24500-01	C12
296-24518-00	C12
266-24521-01	C12
266-24522-00	C12
266-24523-00	C12
439-24524-00	C12
1L4-24611-00	C12
1L4-24615-00	C12
1L4-24616-00	C12
4F4-24705-00	C13
561-24726-00	C13
561-24728-01	C13
562-24731-02	C13
561-24768-02	C13
1K8-24774-00	C13
4F4-24796-00-E1	C 4
4F4-24796-00-L3	C 4
4F4-24796-00-1A	C 4
4F4-24796-00-26	C 4
4F4-24796-00-29	C 4
4F4-24810-00	C14
341-24818-02	C13
4F4-24860-00	C14
4F4-24865-00	C14
439-25111-01	C15
195-25115-00	C15
3T5-25121-00-35	C15
3E1-2513A-00	C15
	D 3
439-25135-00	C15
109-25136-00	C15
102-25137-00	D 2
439-25138-00	C15
183-25149-00	C15
3E1-25155-00	C15
439-25181-01	D 2
439-25311-00	D 3
109-25315-00	D 3
3E1-25321-00-35	D 3
296-25330-00	C15
	D 3
1L4-25337-00-35	C15
	D 3
1L4-25347-00-35	C15
	D 3
538-25351-01	C15
	D 3
1M3-25355-01	D 3
561-25371-00	D 3
439-25381-01	D 4
102-25389-00	D 4
101-25412-00	D 3
109-25428-20-33	D 3
2T5-26111-00	D 5
395-26241-00	D 5
395-26242-00	D 5
395-26243-00	D 5
2T5-26244-00	D 5
2T5-26261-00	D 5
2T5-26262-00	D 5
2T5-26267-00	D 5
2T5-26273-00	D 5
2T5-26274-00	D 5
1Y0-26290-00	D 5
1Y0-26290-10	D 5
2T5-26311-00	D 5

PART NO.	GRID NO.
2T5-26312-00	D 5
2T5-26321-00	D 5
156-26329-00	D 5
439-26331-00	D 5
4F5-26335-00	D 5
4F4-26341-00	D 5
164-26363-00	D 5
439-27111-03-33	D 6
336-27112-00	D 6
1M3-27114-00	D 6
563-27211-03-91	D 6
288-27231-00	D 6
395-27311-01	D 6
439-27411-00	D 6
441-27413-01	D 6
1L7-27430-00	C 8
120-27431-00	C 8
1L7-27432-00	C 8
120-27433-00	C 8
561-28100-11	C 5
395-28185-00	C13
439-28189-00	C 6
1L4-28311-00	C 6
116-28317-00	B 9
439-28321-00	C 4
439-28335-02	D14
1L4-28356-00	D14
439-28371-00	D14
4F4-28385-01-36	C 4
3E1-8131X-M2	B 4
4A5-81313-M5	B 4
4F4-81910-60	D11
4F4-81915-00	D11
353-81970-50	D11
353-81970-63	D11
120-82110-29	D11
268-82122-00	D11
122-82131-00	D11
353-82150-00	D11
116-82151-00	D11
4F4-82310-M0	D11
117-82370-20	D11
512-82370-10	D11
4F4-82508-00	D11
1J7-82530-00	D12
341-82540-01	D12
341-82543-00	D12
4F5-82590-22	D12
803-82591-00	D 5
4F4-83310-N0-93	D 7
152-83311-10	D 7
4F4-83312-N0	D 7
4F4-83330-N0-93	D 7
4F4-83340-N0-93	D 7
3E1-83350-11	D12
4F4-83371-10	D12
561-83390-20	D12
5R4-83510-F0	D 8
122-83516-10	D 8
5R4-83536-F0	D 8
4F4-83550-00	D 8
4F4-83550-10	D 8
425-83912-01	D13
395-83922-02	D13
168-83936-01	D13
439-83941-02	D13
361-83980-30	D13
4F4-84110-00	D 9
206-84114-60	D 9
4F4-84115-00	D 9
3L6-84120-00	D 9
3L6-84124-00	D 9
4F4-84130-00-E1	D 9
4F4-84130-00-L3	D 9
4F4-84130-00-1A	D 9
4F4-84130-00-26	D 9
4F4-84130-00-29	D 9
3L6-84137-00	D 9
3L6-84140-00	D 9
3L6-84145-00	D 9
4F4-84510-00	D10
122-84514-30	D10
4F4-84520-00	D10
1K8-84521-00	D10
1K8-84523-00	D10
2E9-84524-00	D10
2N8-85111-00	D12
3E1-85500-M1	B 4
3T5-85520-M1	B 4
2E9-85540-M0	D11
4F4-85542-00	D11
4F8-85550-M0	B 4
3E1-85561-M1	B 4
2T4-85568-M1	B 4
2T4-85569-M1	B 4
4U5-85580-M0	B 4
2T5-85720-00	D12
90101-06278	C15
	D 3
90101-08249	C15
	D 3
90101-08285	C 4
90101-08287	D 6
90105-10006	C 9
90109-06001	C 2
90109-08032	D 6
90109-08183	D 3
90109-08319	D 3
90109-08368	D 4
90109-08386	C 4
90113-06013	B13
90116-06100	B 2
90119-05001	B13
90119-06017	C 9
90119-08023	C15
	D 3
90149-04135	B 5
90149-05120	D13
90149-05121	D13
90149-08094	C 3
90151-06016	C 9
90159-05018	C14
90167-03004	D 5
90170-08158	C 4
	D 3
90170-10038	D 5
90170-10105	B 5
90170-12060	B13
90170-12215	B 3
90171-10004	D 2
90171-12005	D 4
90179-06176	D 5
	D 6
90179-12244	B13
90179-25051	C 9
90201-05033	C 8
90201-06052	C 4
90201-06062	D14
	D14
	D14
90201-06067	C 6
90201-07076	C15
90201-12179	B15
90201-12190	C 8
90201-12575	C 3
90201-15701	B12
90201-20266	B12
90201-20269	C15
90201-20279	C 8
90202-04003	B 9
90202-06010	B 9
90208-12015	B13
90209-10021	C 9
90209-10108	B12
90209-10131	D13
90240-06009	C 8
90249-12008	D 5
	D 6
90280-03017	B 3
90282-05005	B13
90338-07011	D13
90340-12005	B10
90340-14054	B 9
90387-06461	B 9
90387-10081	D 2
90387-12096	D 4
90387-12412	D 4
90387-20163	B 3
90401-10029	B 5
90430-04004	B 5
90430-06012	B 9
90430-12038	B10
90445-05206	B 5
90445-08247	D11
90445-09078	C12
90445-09300	C 7
90445-09304	C12
90461-05036	B 4
90464-20031	D 5
90467-08003	C 7
	C12
90467-20023	B 6
90468-02033	B 5
90468-12007	D 4
90480-11057	B 5
90480-12053	C 5
90480-16179	B10
90501-05512	D 5
90501-10245	D 6
90501-20125	B13
90504-06020	C 7
90504-18005	B12
90506-06075	B 6
90506-07066	B14
90506-08122	C 3
90506-10184	C 2
90506-16150	C15
	D 3
90506-25047	D 6
90506-26270	D 6
90508-26136	B12
90508-32056	D 6
90508-32263	C 3
90560-10104	C15
90560-12110	D 3
90560-17150	B13
91401-16015	C 8
91401-20015	D 4
	D 6
91401-20020	D 2
91401-30025	D 4
91830-21014	B11
91830-22016	B10
92501-06010	D11
92501-06012	B15
	D14
92501-06012	B15
92501-06014	B10
	B14
	C 2
	C12
92501-06015	D11
92501-06020	D11
	D14
92501-06025	B 6
	B11
92501-06035	B10
92501-06040	B11
92501-06045	B10
	B11
92501-06050	B10
	D14
92501-06100	B11
92501-08010	B10
92701-06012	B10
92901-03100	B 6
92901-04100	B 4
92901-05100	D12
92901-05200	D12
92901-05600	B 9
	D11
92901-06100	C 4
	C 6
	C13
	D 4
	D11
	D12
92901-06200	B 2
92901-06600	C 4
	C 6
92901-06600	C13
	D 4
	D 6
	D11
92901-08100	C 4
	C14
	C15
	D 2
	D 3
	D 4
	D 6
92901-08600	B 9
	C14
92901-10100	C 9
92901-12100	B 3
92901-12600	B 3
92902-04100	B 7
93101-10001	B 5
93101-12004	C 3
93102-17171	B15
93102-20009	B 3
93103-28011	B 3
93104-07003	C15
93104-11028	B14
93104-21016	D 3
93105-47007	C15
93106-20001	C15
93106-20002	D 3
93109-15001	B12
93210-08006	C 2
93210-12327	B10
93210-14104	D 2
93210-18023	B 3
93210-21190	B11
93210-26240	B 5
93210-29375	B 9
93210-98202	B13
93306-20309	B15
93306-20418	B 3
93306-30003	C15
93306-30103	D 3
93306-30301	B15
93310-11268	B 3
	D15
93310-41809	B 3
	D15
93315-23208	C 2
93410-12003	B15
93410-16007	B15
93410-20009	B12

NUMERICAL INDEX

PART NO.	GRID NO.
93410-20009	C15
93430-07012	B 5
93430-09019	C 2
93430-10016	C 2
	C 3
93430-12008	D 6
93440-10028	B12
93440-16030	B15
93450-13022	B 3
	D15
93501-04011	C 9
93503-16010	B13
	C 9
93603-08072	B 5
93603-14026	B 5
93604-22050	C 2
93606-14081	C 2
94140-08237	D 2
	D 3
94240-08044	D 2
	D 3
94580-13088	D 4
94604-20001	D 4
94701-00040	B 2
95301-05600	B 9
95301-06600	B 2
	C13
	C15
	D 3
	D 4
95301-06700	B13
95301-08600	C 3
	C15
	D 2
	D 3
95301-08700	D 4
	D 6
95301-10600	C 9
95303-12800	C 8
95601-05100	D13
95601-10100	C 8
95701-05100	D 8
95701-06100	C 6
	D10
95701-08100	C 4
	D 7
95821-08120	C 4
97301-06010	B 6
97301-06012	C 6
97301-06012	C13
	D11
	D12
97301-06016	C 4
	D11
	D12
97301-06020	C 6
97301-06025	C13
97301-08016	B 9
	C14
97311-06025	B12
97321-06020	C 3
97321-08016	C 4
98501-03006	C12
98501-03008	B 6
	D 7
98501-04006	B 4
	B11
98501-04012	B 4
98501-04018	B 7
98501-05010	C 8
98501-05020	B 5
	D11
98501-05025	D13
98501-05035	B 5
98503-04010	B 4
98511-04025	B 4
98701-05016	B 4
98901-04016	D12
98906-06010	B 9

COPY RIGHT: ALL RIGHTS RESERVED
NO PART OF THIS PUBLICATION MAY BE
REPRODUCED WITHOUT PERMISSION.

YAMAHA
YAMAHA MOTOR CO., LTD.
2500 SHINGAI IWATA-SHI SHIZUOKA-KEN JAPAN

PRINTED IN JAPAN
First edition Jul., 1981
TG